Lis 5T
Lis 7T
Lis 8T

Instruction Book

LACUNZA®

Lacunza congratulates you on your choice.
Certified under ISO 9001, Lacunza guarantees the quality of its appliances and undertakes to meet the needs of its customers.
Confident of the know-how afforded by more than 50 years' experience, Lacunza uses advanced technologies in the design and manufacture of its entire range of appliances. This document will help you install and use your appliance in optimum conditions for your comfort and safety.

CONTENTS

1. PRESENTATION OF THE APPLIANCE 3
1.1. General characteristics 3
1.2. Safety Distances 8
2. INSTRUCTIONS FOR THE INSTALLER 9
2.1. Warning to installers 9
2.2. Room for installation 9
2.2.1. Ventilation of the room 9
2.2.2. Location of the appliance in the room 10
2.3. Installation of the appliance 10
2.3.1. Floor 10
2.3.2. Checks before lighting for the first time 10
2.3.3. Height adjustment and levelling the appliance 10
2.3.4. Casing 10
2.3.5. Connection to the flue 10
2.4. Chimney flue 11
2.4.1. Type of flue 11
2.4.2. Chimney crown 12
3. INSTRUCTIONS OF USE 14
3.1. Fuel 14
3.2. Description of the parts of the appliance 15
3.2.1. Operating components 15
3.3. Lighting 16
3.4. Loading fuel 16
3.5. Operation 16
3.6. Removing ash 17
3.7. Instructions for cooking 17
3.7.1. Cooking in the oven 17
3.7.2. Cooking on the top surface 17
3.7.2.1. Glass-ceramic Top Surface 18
4. MAINTENANCE AND IMPORTANT ADVICE 19
4.1. Maintenance of the appliance 19

4.1.1. Visible enamelled parts 19
4.1.2. Top surface 19
4.1.3. Firebox 19
4.1.4. Inside the appliance 19
4.1.5. Flue socket 19
4.1.6. Chrome parts 20
4.1.7. Brass parts 20
4.1.8. Enamelled-steel parts 20
4.1.9. Oven 20
4.2. Maintenance of the chimney flue 21
4.3. Important advice 21
5. TROUBLESHOOTING 22
6. BASIC BREAKDOWNS 23
7. PRODUCT RECYCLING 25
8. DECLARATION OF PERFORMANCE 26
9. CE MARK 35

1. PRESENTATION OF THE APPLIANCE

For optimum operation of the appliance, we advise you to read this manual carefully before switching on the appliance for the first time. In case of problems or concerns, we urge you to contact your dealer, who will cooperate with you.

In order to improve the product, the manufacturer reserves the right to make changes without notice by updating this document.

This appliance is designed to burn wood in absolutely safe conditions.
WARNING: Faulty installation may have serious consequences.
Installation and all necessary regular maintenance operations must be performed by an authorized installer in full accordance with the specifications set out in the legislation applicable in each country and this instruction book.

1.1. General characteristics

		Unit	Lis 5T	Lis 7T	Lis 8T
	Operating appliance	-	Intermittent	Intermittent	Intermittent
	Appliance classification	-	Type B	Type B	Type B
	Preferred fuel	-	Wood logs (Humidity<25%)		
	Indirect heating functionality	-	NO	NO	NO
Values at Nominal Output	Nominal output to atmosphere (Direct) (P_{nom})	kW	9	10	11
	Efficiency at P_{nom} (η_{nom})	%	76	76	78
	CO emission at 13% O_2 at P_{nom} (CO_{nom})	mg/m³	1419	1420	1420
	NO_x emission at 13% O_2 at P_{nom} (NO_{Xnom})	mg/m³	116	120	120
	OGC emission at 13% O_2 at P_{nom} (OGC_{nom})	mg/m³	80	80	78
	PM emission at 13% O_2 at P_{nom} (PM_{nom})	mg/m³	33	34	34
	Optimum flue draught at P_{nom} (p_{nom})	Pa	11	12	13
	Gas temperature of flue at P_{nom} (T_{nom})	°C	216	215	213
	Gas temperature on the flue socket flange at P_{nom}	°C	259	258	256
	Log load frequency at P_{nom}	h	1	1	1
	Gas mass flow at P_{nom}	g/s	12.9	14.1	15.3
	Wood consumption (beech) at P_{nom}	kg/h	2.8	3.2	3.5
	Chimney temperature class	-	T400	T400	T400
	Dimensions of the firebox				
	Width	mm	220	240	240
	Depth	mm	420	400	400
	Useful height	mm	270	300	300
	Maximum length of the logs	cm	40	40	40
	Volume heated (45W/m³) at P_{nom}	m³	200	222	244
	Useful dimensions of the oven				
	Width	mm	280	370	420
	Depth	mm	430	420	420
	Useful height	mm	420	420	400
	Capacity of the ashpit	L	5	5	5
	Weight	kg	184	199	214

Flue socket diameter (d_{out})	mm	150	150	150
Type of heat output/room temperature control	Single stage heat output, no room temperature control			
Energy efficiency class	-	A	A	A
Energy efficiency index (EEI)	-	100	100	103
Seasonal Energy Efficiency of space heating (η_s)	%	66	66	68

Note: The values indicated in the above table are based on tests performed in accordance with UNE-EN 16510, with logs with no more than 18% humidity and pressure conditions as indicated in each case.

Warning: this appliance is designed and prepared to work with the types of fuel, degree of humidity of the fuel, fuel loads, fuel load frequencies, flue draught and system of installation indicated in this Instruction Book. Failure to respect these conditions may lead to problems with the appliance (deterioration, shorter useful life, etc.) which are not covered by the Lacunza warranty.

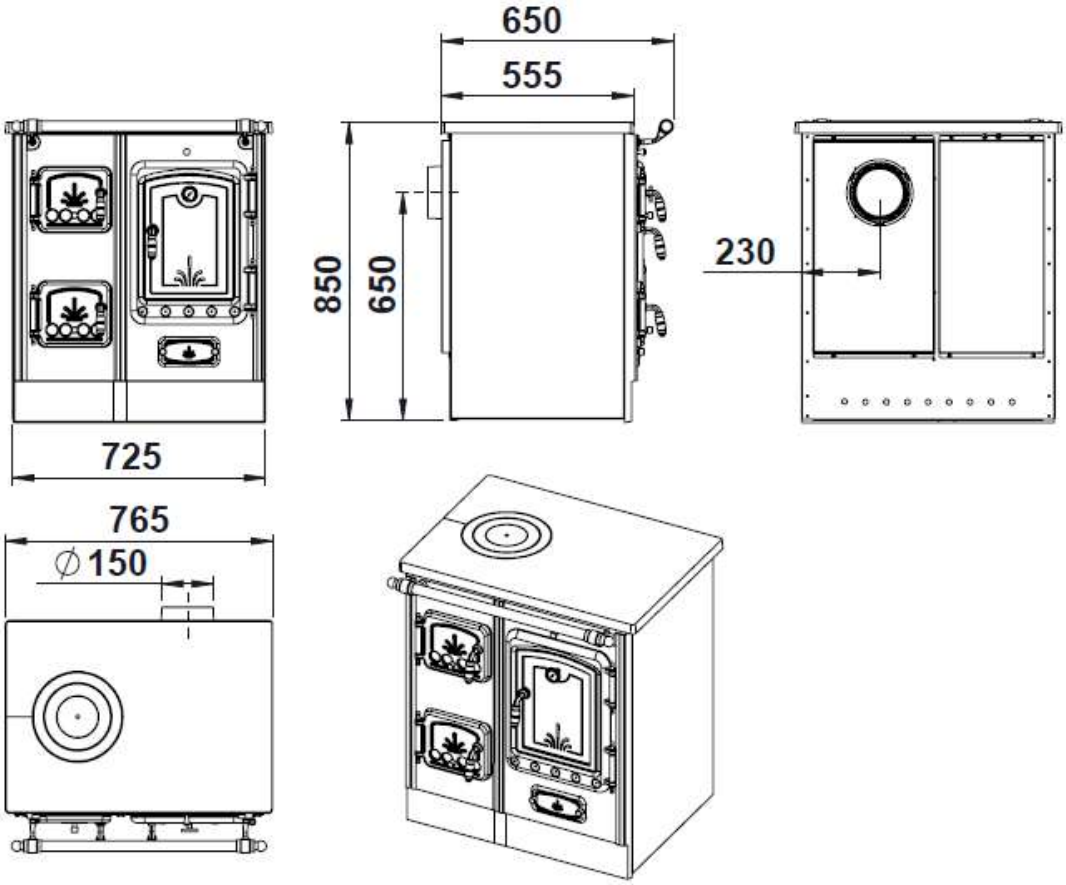

Figure No.1 - Dimensions of the Lis 5T appliance in mm

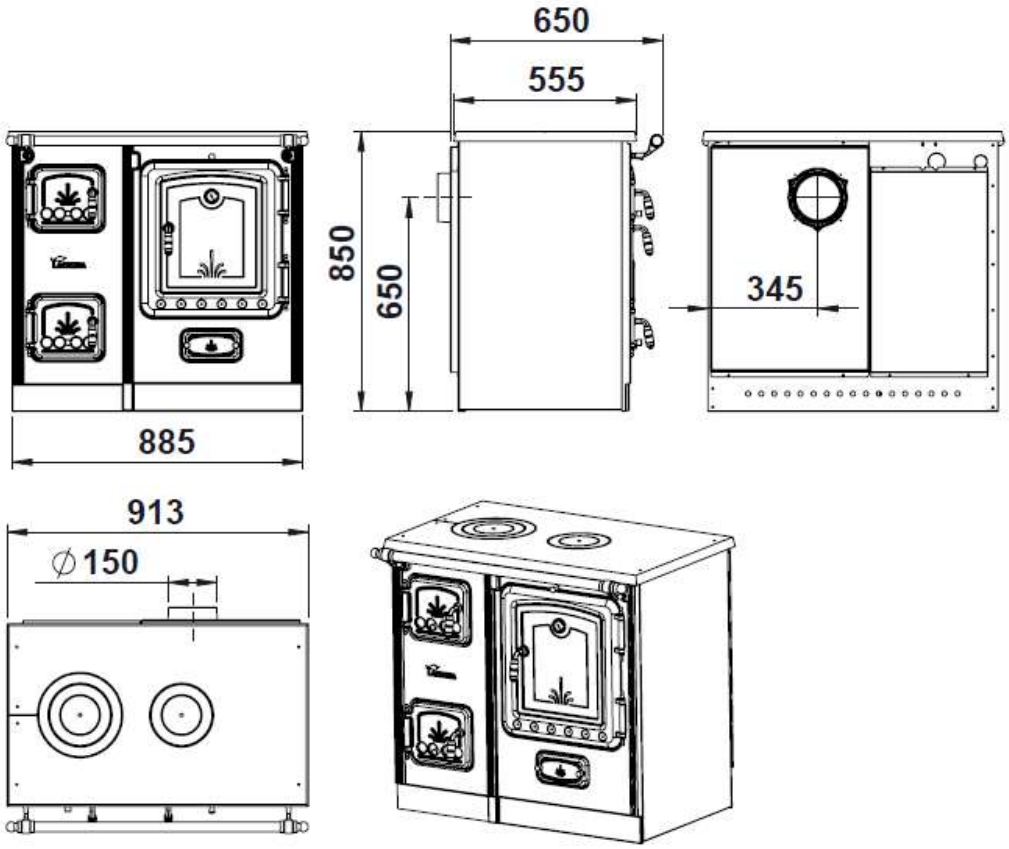

Figure No.2 - Dimensions of the Lis 7T appliance in mm

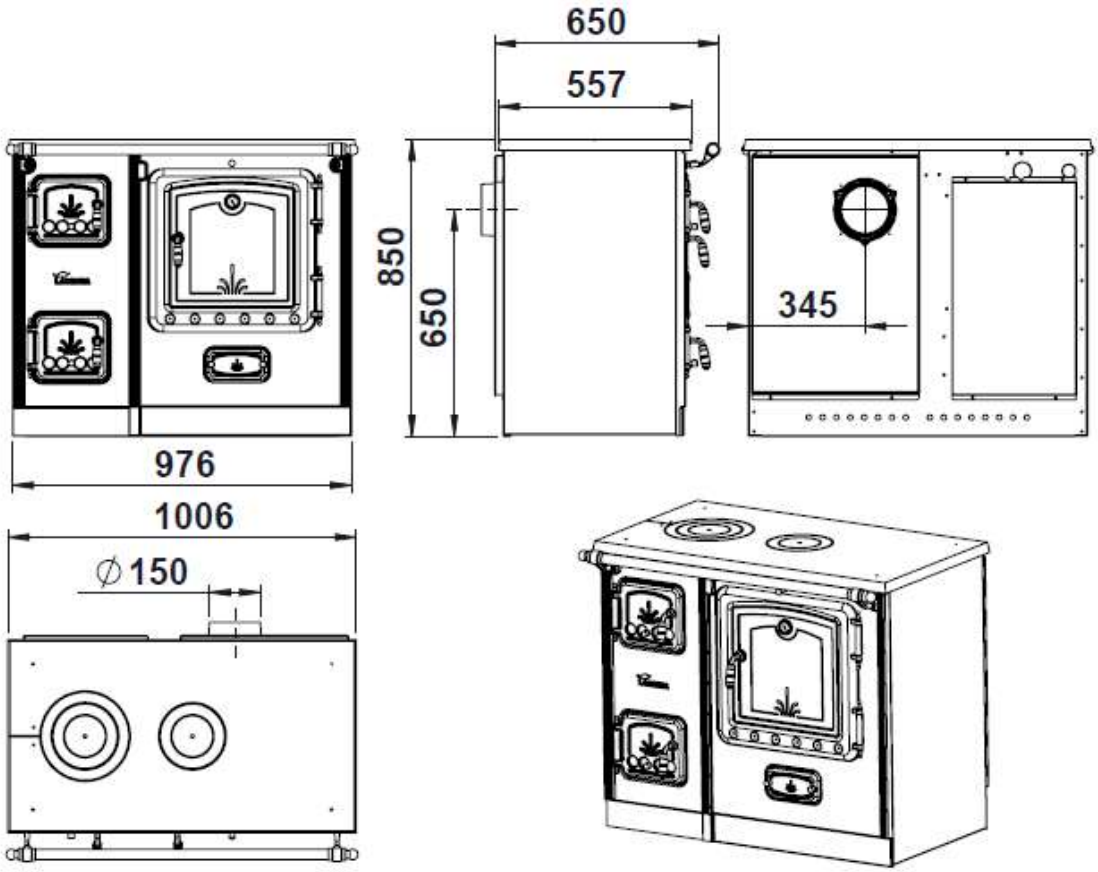

Figure No.3 - Dimensions of the Lis 8T appliance in mm

1.2. Safety Distances

Please make sure to respect the installation distances of the appliance in relation to combustible materials.

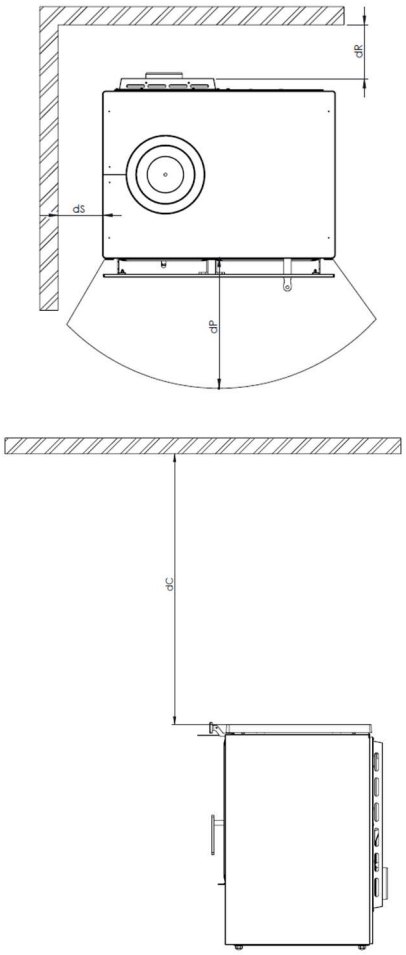

Combustible materials

	LIS 5T	LIS 7T	LIS 8T
dC (mm)	800	800	800
dP (mm)	200	200	200
dS (mm)	200	200	200
dR (mm)	200	200	200

Please note that it may be necessary to protect even non-combustible materials to prevent breakage, deformation, etc., due to excessive temperature, if the non-combustible material is not designed to withstand high temperatures.

2. INSTRUCTIONS FOR THE INSTALLER

2.1. Warning to installers

All local and national regulations, including all those referring to national and European standards, must be observed when installing the appliance.

Installation of the appliance must be performed by an authorised installer.

An incorrectly installed appliance may lead to serious incidents (fires, creation of harmful gases, deterioration of nearby fixtures, etc.).

Lacunza's liability is limited to the supply of the material and does not include installation of the appliance.

2.2. Room for installation

2.2.1. Ventilation of the room

The appliance needs to consume oxygen (air) in order to work properly. Ensure a suitable air supply in the room in which the appliance is fitted. This quantity of oxygen is additional to the oxygen that we need in order to breathe (air renewal).

In order to ensure the high quality of the air you breathe and to avoid potential accidents resulting from high concentrations of the gases produced by combustion (mainly carbon dioxide and carbon monoxide), it is absolutely crucial to ensure the suitable renewal of the air in the room in which the appliance is fitted.

the room must always have at least two permanent grilles or openings to the exterior in order to renew the air (one for intake and the other for extraction).

For the installation of its appliances, Lacunza recommends an additional section for these openings. One of these two grilles must be situated high up in the room (at less than 30 cm from the ceiling) and the other one low down (at less than 30 cm from the floor). Both grilles must open outdoors in order to renew the air in the room with fresh air.

The air inlet grilles must be positioned so that they cannot be blocked or closed accidentally.

The minimum section that each of these grilles must have depends on the nominal output of the appliance in accordance with the following table:

Output of the appliance (kW)	Minimum additional section of each of the grilles (cm^2)
P ≤ 10kW	70
10 < P ≤ 15	90
15 < P ≤ 20	120
20 < P ≤ 25	150
25 < P ≤ 30	180
30 < P ≤ 35	210
P > 35	240

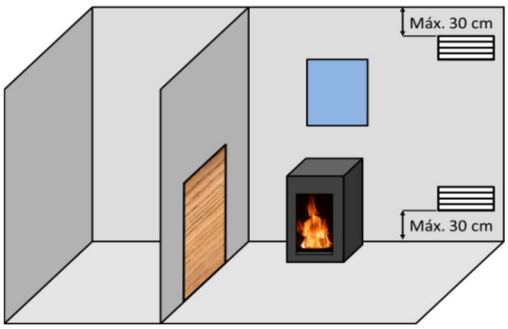

Figure No.4 - Guideline indications for ventilation grilles

The appliance must always be used with the door(s) closed.

In rooms equipped with Controlled Mechanical Ventilation, the system extracts and renews the ambient air; in such cases, the room is at slightly low pressure and it is necessary to install a non-closable outside-air inlet with a section of at least 90 cm^2.

2.2.2. Location of the appliance in the room

Choose a location in the room which favours good hot-air distribution by convection and radiation.

2.3. Installation of the appliance

2.3.1. Floor

Make sure that the base can withstand the total constructed weight of the appliance and its casing.

When the floor surface (base) is combustible, fit suitable insulation.

2.3.2. Checks before lighting for the first time

- Make sure that the glass/es is/are not broken or damaged.
- Make sure that the flueway is not obstructed with packing or loose parts.
- Make sure that the airtight joints on the flue circuit are in perfect condition.
- Make sure that the doors close properly.
- Make sure that all moving parts are fitted in place.

2.3.3. Height adjustment and levelling the appliance

The appliance must be perfectly level, horizontally and vertically, both at the front and on the sides (use a spirit level).

2.3.4. Casing

Make sure that the material around the appliance is not flammable or likely to deteriorate as a result of heat (wallpaper, carpet, plastic-based casing, Silestone, etc.).

If the top surface is surrounded by building material (marble, brick, etc.) as part of the kitchen stove installation process, leave a gap of at least 4mm to allow the top surface to dilate.

2.3.5. Connection to the flue

The appliance must be connected to the chimney flue using special piping designed to resist the products of combustion (e.g. stainless steel, enamelled steel, etc.)

To connect the flue to the socket flange, insert the piping inside the flange and seal the joint with fire sealant or fire cement to make it completely airtight.

The installer must ensure that the pipe connected to the appliance is well secured and there is no chance of it coming free from its housing (e.g. as a result of dilatation due to temperature, etc.).

If you have a cast-iron top surface with a flue socket on top, the flue can be fitted either on top or at the rear of the appliance.

To install the upper smoke outlet, we must first release the cast iron cover **B** and the rear smoke outlet flange **C**

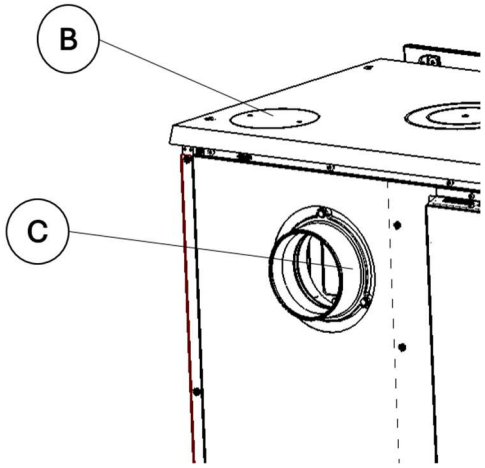

Figure No.5 - Initial situation. We release the indicated pieces.

Next, we place the upper smoke outlet flange **A** on the countertop and secure it with two screws.

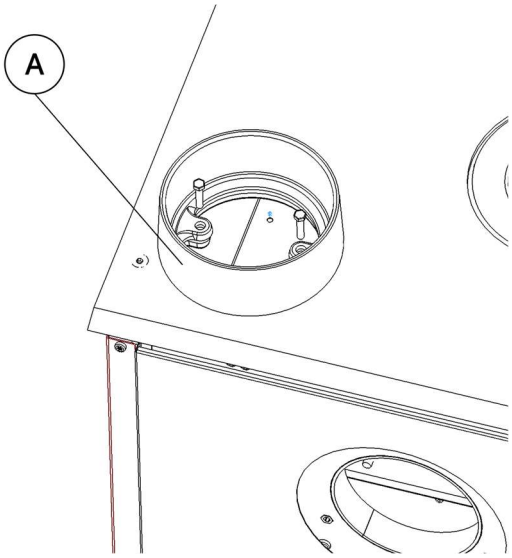

Figure No.6 - We place the upper smoke outlet flange.

Finally, we have to cover the hole in the back. First, we fasten the cover adapter D with three screws and three nuts, then we screw the cover E onto it and we place the galvanised cover F.

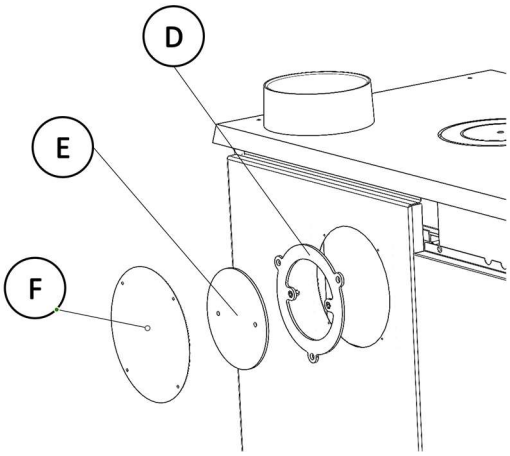

Figure No.7 - We place the adapter and the covers

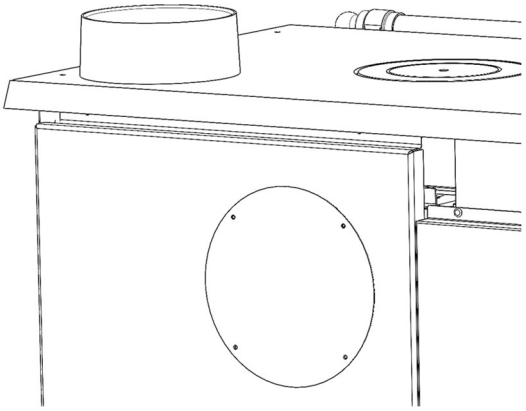

Figure No.8 - Final situation, suitable for upper smoke outlet.

2.4. Chimney flue

The chimney flue must comply with present standards on the installation of chimneys.

In rooms equipped with Controlled Mechanical Ventilation, the ventilation outlet must never be connected to the flue.

The appliance must always have its own chimney flue, never sharing a chimney flue with another appliance.

2.4.1. Type of flue

The flue must be made of special material designed to resist the products of combustion (e.g. stainless steel, enamelled steel, etc.).

Non-central-heating appliances (without back boiler) require an insulated, double-sleeve flue only on those sections that run outdoors or through cold areas. Single piping can be used inside the building, the heat of the gases serving to heat rooms, insulating only those sections where excess temperature may cause damage.

If the chimney is constructed, then it is necessary to pipe and insulate it to ensure correct updraught.

The diameter of the pipe must be the same as the diameter of the flue socket on

the appliance over its entire length in order to ensure correct operation.

The flue must prevent the entry of rainwater.

The flue must be clean and airtight over its entire length.

The flue must be at least 6m tall and the chimney cap must not hinder the free release of gases.

If the flue tends to suffer from downdraught, then it is necessary to fit an effective anti-downdraught cowl, a static cowl or a smoke extraction fan, or reshape the chimney.

Never make 90° bends, except the one on kitchen-stove outlets, due to the great loss of draught they cause, and reduce 45° bends down to an absolute minimum. Each 45° bend is equivalent to a 0.5m reduction in flue length. Horizontal flue sections should not be installed because they cut updraught a great deal.

The appliance is designed to operate under controlled draught conditions. The appliance must operate at a chimney draught of between 12Pa and 15Pa. To ensure this draught, an automatic draught moderator must be installed in the flue. Uncontrolled draught operation can lead to quick damage of the appliance, which will not be covered by the warranty.

The flue must not rest its weight on the appliance, as this could damage the worktop.

Bear in mind that high temperatures may be reached in the flue, meaning that it is essential that insulation be enhanced in sections in which combustible material is present (wooden beams, furniture, etc.). It may even be necessary to protect non-combustible material in order to prevent breakage, deformation, etc., as a result of overheating if the material is not designed to withstand high temperatures.

It must be possible to clean the entire flue, no sections being left inaccessible for cleaning purposes.

2.4.2. Chimney crown

The upper end of the chimney must clear the roof, the roof ridge or any obstacle located on the roof by at least 1m.

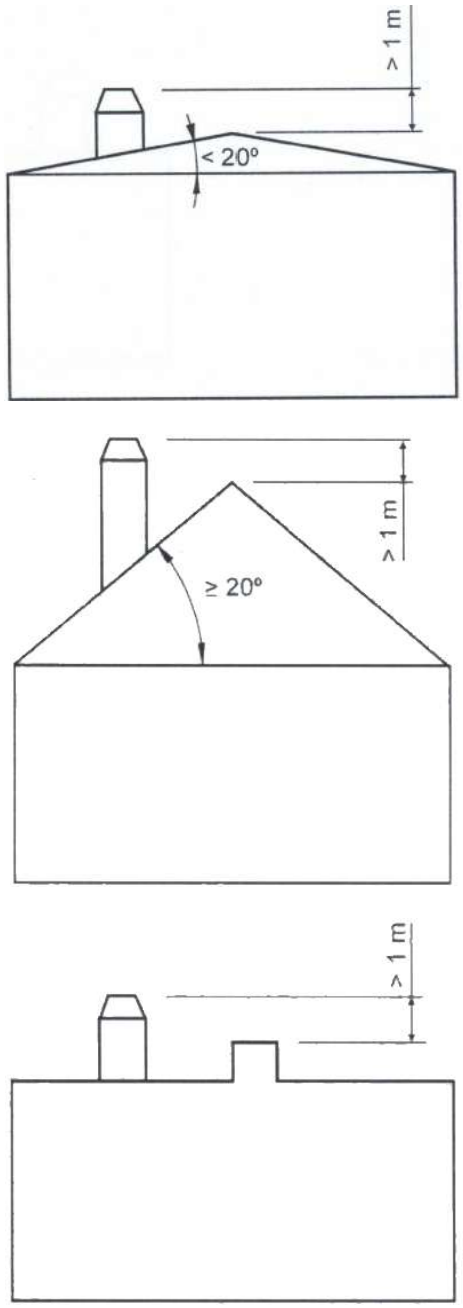

Figure No.9 - Distances between chimney crown and roof ridge

The chimney crown must clear the highest point of any neighbouring building or obstacle located within a 10m radius of the chimney outlet by more than 1m.

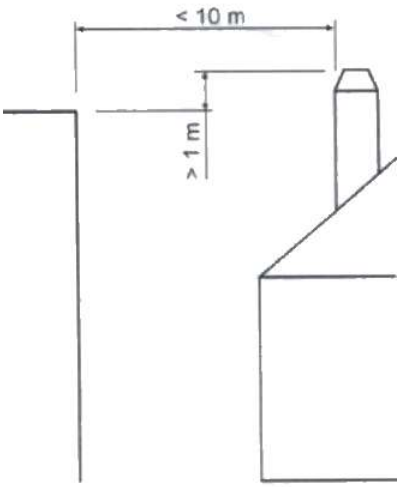

Figure No.10 - Distances between the chimney crown and objects within a 10m radius

The chimney crown must clear any neighbouring building or obstacle located within a radius of 10m to 20m from the chimney outlet.

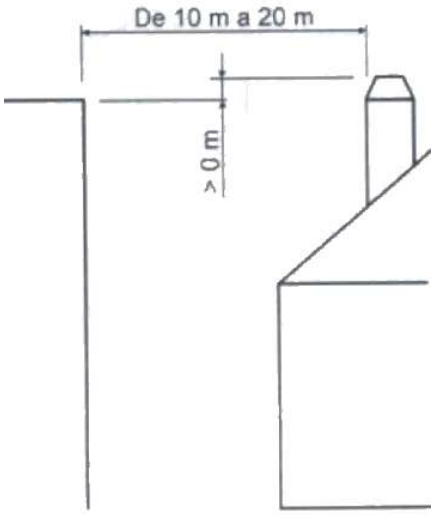

Figure No.11 - Distances between the chimney crown and objects within a radius of between 10 and 20m

3. INSTRUCTIONS OF USE

The manufacturer accepts no liability whatsoever for damage caused to parts as a result of the improper use of non-recommended fuels, modifications made to the appliance or how it is installed. **Only use original replacement parts.**

All local and national regulations, including those referring to national and European standards, must be observed when using the appliance.

Heat is diffused by radiation and convection via the front and exterior of the appliance.

3.1. Fuel

This appliance must not be used as an incinerator. Do not use non-recommended fuels.

- Use dry logs (max. 16% humidity), cut at least 2 years ago, clean of resin and stored in a sheltered, ventilated place.
- Use hard woods with high calorie values and good ember production.
- Large logs should be cut to useable lengths before being stored. The logs should have a maximum diameter of 150mm.
- Finely-chopped wood produces greater heat output, but also burns more quickly.

Optimum fuels:

- Beech.

Other fuels:

- Oak, chestnut, ash, maple, birch, elm, etc.
- Pine and eucalyptus logs are low density and produce very long flames, and may cause the parts of the appliance to wear out more quickly than normal.
- Resinous wood may mean that the appliance and the flue need to be cleaned more often.

Non-permitted fuels:

- All types of coal and liquid fuel.
- "Green wood". Green or damp wood reduces the performance of the appliance and leads to soot and tar build-up on the inner walls of the flue, obstructing it.
- "Recovered wood". The burning of treated woods (railway sleepers, telegraph posts, plywood, fibreboard, pallets, etc.) quickly blocks the system (soot and tar build-up), harms the environment (pollution, smells) and may lead to deformation of the firebox due to overheating.
- All materials which are not wood (plastic, spray cans, etc.).
- Never use gasoline, gasoline-type lamp fuel, paraffin, charcoal lighter fluid, ethyl alcohol or similar liquids to ignite or rekindle a fire in the equipment. Keep all such liquids away from the equipment while it is in use.

Green and reprocessed wood may cause chimney fires.

The graph below shows how the humidity of firewood affects its heat output:

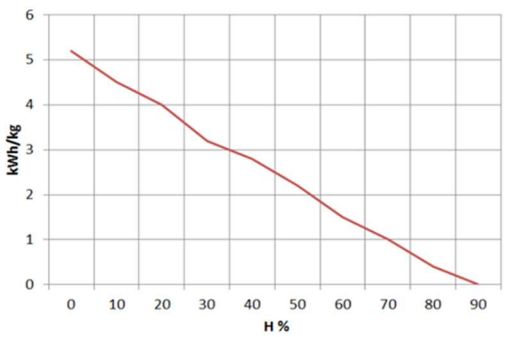

Figure No.12 - Relationship between firewood humidity and heat output.

3.2. Description of the parts of the appliance

3.2.1. Operating components

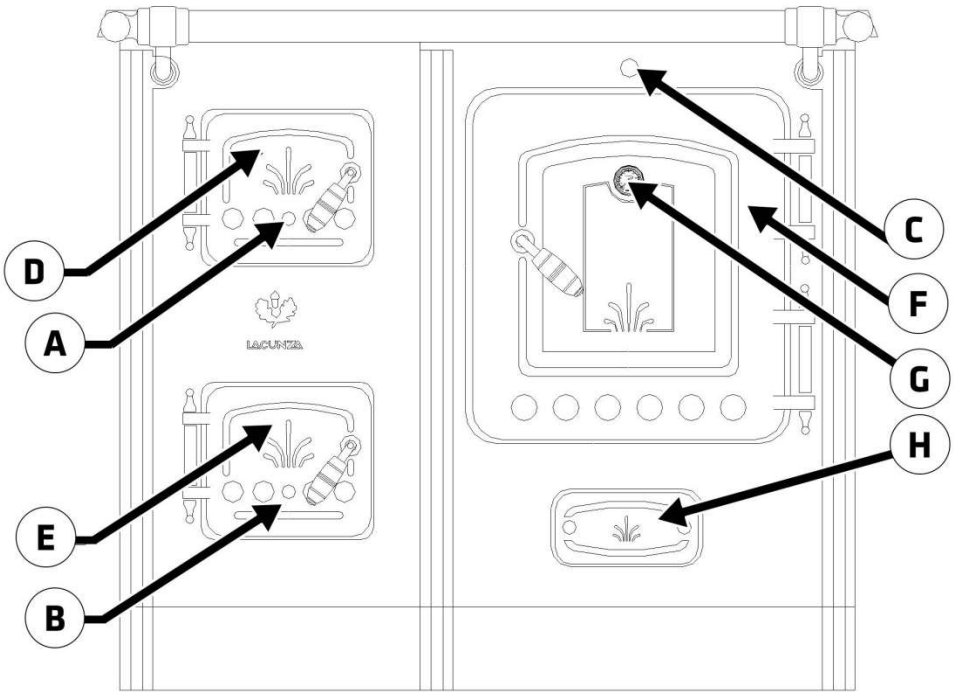

Figure No.13 - Operating components on the appliance

- A: Secondary air intake
  - A1 open (turn clockwise)
  - A2 closed (turn anti-clockwise)
- B: Primary air intake
  - B1 open (turn clockwise)
  - B2 closed (turn anti-clockwise)
- C: Direct draught rod
  - C1 open
  - C2 closed
- D: Firebox door handle
- E: Ashpit door handle
- F: Oven door handle
- G: Oven thermometer
- H: Cleaning hatch

3.3. Lighting

Use of the appliance in warm weather (warm days, early hours of the afternoon on sunny days) may lead to lighting and updraught problems.

Certain weather conditions, such as fog, ice, humidity entering the flue, etc., may hinder sufficient updraught in the flue and lead to suffocation.

Proceed as follows in order to light the appliance satisfactorily:

- Open the firebox door(s) and open all the firebox air-intake inlets to the full.
- Open the direct draught rod for about 15 minutes until the chimney flue warms up.
- Place paper or a firelighter and some wood chips in the firebox.
- Light the paper or firelighter.
- Leave the door slightly ajar, the width of two or three fingers, for about 15 minutes.
- The first time the appliance is lit, the fire should be gentle to allow the parts of the appliance to dilate and dry.

Important: The first time it is lit up, the appliance may give off smoke and strange smells. This is not a cause for concern. Open an outdoor window to ventilate the room during the first few hours of operation.

If you notice water around the appliance, this is produced by the condensation of the moisture in the wood on lighting the fire. This condensation will no longer appear when the appliance has been lit three or four times and has adapted to its flue. If it does not disappear, then check the flue draught (length and diameter of the flue, flue insulation, airtightness) and the humidity of the wood used.

If the condensation comes into contact with the enamel, wipe it off and dry with a cloth straight away to prevent any possible loss of shine.

3.4. Loading fuel

In order to load firewood, open the firebox door gently, preventing the sudden entry of air to the firebox so that smoke does not enter the room that the appliance is installed in. Firewood can also be loaded through the ring holes on cast-iron top surfaces.

Perform this operation with the glove to prevent burns to the hands.

The maximum height of the load shall be approximately one third of the height of the firebox.

The minimum interval between loads for nominal heat output is 60 minutes.

Always load with the nominal amount (see table in section 1.1).

For minimum burning (e.g. at night), use thicker logs.

When the firebox is loaded, close the door.

3.5. Operation

The appliance should be operated with the door closed and the direct draught rod closed.

For safety reasons, never close all the appliance's combustion-air intakes.

Primary-air intake

By opening this inlet, air enters the firebox via the firebox grille.

Secondary-air intake

By opening this inlet, air enters the firebox via the top of the firebox door.

IMPORTANT: Keeping the secondary-air intake open helps keep the door glass cleaner for longer.

Double-combustion air intake

This appliance has a free, non-adjustable Double Combustion Air Inlet, through the holes at the rear of the firebox.

Air enters the combustion flame, making for more efficient and less polluting combustion because post-combustion takes place, burning the particles which were not burned in the first combustion. This increases the performance of the appliance and reduces emissions.

In order to obtain maximum output, open all the air intakes to the firebox and in order to obtain minimum output, tend towards closing them. For normal use, we recommend you close the Primary Intake and leave the Secondary open 60 % approximately.

In class B or BE appliances (without combustion air ducting from the street), when the appliance is not in use, the appliance-flue duct assembly may represent a heat leakage route to the street. When the appliance is not in use, it is advisable to leave the air inlet registers to the combustion chamber closed to minimise these energy losses.

3.6. Removing ash

Following sustained use of the appliance, it is necessary to remove the ash from the firebox. Remove the ashpit box when cold or using something to prevent yourself from getting burned (glove).

Never throw hot embers into the rubbish.

Access the ashpit by opening the door on the appliance.

3.7. Instructions for cooking

The appliance allows you to cook on the top surface and in the oven.

3.7.1. Cooking in the oven

Follow the indications given in the following table:

	Min. Output	Max. Output
Direct draught	Closed	Closed
Primary intake	Closed	Open
Secondary intake	Closed	Open

The oven contains an oven tray and an oven rack.

The oven thermometer gives an approximate reading of the temperature inside the oven. While the appliance is warming up, which may take two hours, the thermometer indicates a temperature lower than the real temperature inside the oven (due to the thermal inertia of the cast iron).

3.7.2. Cooking on the top surface

Follow the indications given in the following table:

	Min. Output	Max. Output
Direct draught	Closed	Closed
Primary intake	Closed	Open
Secondary intake	Closed	Open

The best area of the top surface for cooking is the over the stove firebox. The area of the top surface over the oven should be used to keep food warm.

3.7.2.1. Glass-ceramic Top Surface

Never place aluminium receptacles on the glass-ceramic top surface when hot. Likewise, never place aluminium foil or plastic, or pour sugar on the surface; they may become permanently incrusted in the glass.

Earthenware pots will scratch the glass.

If you lift the glass, you will discover enamelled cast-iron protective supports. You can cook on top of these, but bear in mind the indications given in the Maintenance section.

How to lift/lower the glass-ceramic top surface

In order to lift the glass-ceramic surface and cook on the cast-iron protective supports, insert the hook supplied with the stove in the cylindrical orifice and move gently as shown in the images.

Figure No.14 - Hook inserted in the cylindrical orifice

Figure No.15 - Lifting with the hook

When you reach the full-open position, remove the hook from the orifice and leave to one side.

Figure No.16 - Glass-ceramic top surface resting at its full-open position

In order to lower the glass-ceramic top surface back to its original position, repeat the process in reverse order. Move gently at all times.

When you have finished using the protective supports, Lacunza recommends that you always return the glass-ceramic top surface to its original position (horizontal).

The glass-ceramic top surface must always be lifted/lowered when cold.

4. MAINTENANCE AND IMPORTANT ADVICE

4.1. Maintenance of the appliance

The appliance, the flue connector piping and the flue must be cleaned regularly, particularly following long periods without use.

4.1.1. Visible enamelled parts

The parts on the front of the kitchen stove are made of enamelled cast iron. Use a slightly damp cloth (or cloth with neutral soap) to clean the enamel and dry immediately (always when cold). Do not use metal scouring pads, abrasive, corrosive, chlorine-based or acid-based products to clean the enamelled parts; they could damage the enamel.

If water condenses or accidentally splashes on the appliance, clean the parts affected before they dry; otherwise, the colour of the enamel may be affected.

Be particularly careful to avoid spilling acid or alkaline products (tomato sauce, lemon juice, vinegar, ceramic hob cleaner, etc.) on the enamelled surfaces of the kitchen stove; they may damage the enamel coating.

4.1.2. Top surface

Glass-ceramic Top Surface

Use a damp cloth soaked in soap or special stainless-steel cleaning products to clean the stainless-steel trim around the ceramic.

Do not use metal scouring pads or abrasive sponges to clean the glass ceramic; they may scratch the surface. Use a scraper and special glass-ceramic cleaning products available on the market.

Enamelled protection

Maintain according to the instructions given for Visible enamelled parts (front of the kitchen stove). Due to their position and function, however, these parts are subject to a great deal of wear and it is practically impossible to keep them in a good state.

Cast-iron top surface

Use special sandpaper and specific products to clean and maintain.

4.1.3. Firebox

Clean the firebox area of ash, etc.

4.1.4. Inside the appliance

To access the inside of the stove, lift the glass-ceramic surface and remove the protective supports. With a cast-iron top surface, you can access the inside though the ring holes or unscrew the top surface. You can then clean the oven area and the gas passage between the oven and the right-hand side.

Clean the firebox area of ash.

4.1.5. Flue socket

The flue socket area must be kept clean at all times for the appliance to work properly.

It must be cleaned as often as required. How often it is cleaned depends on how much the appliance is used and the type of fuel employed.

On kitchen stoves with a top flue socket, the flue socket is accessed by lifting the first section of piping. On kitchen stoves with a rear flue socket, the socket elbow-flange is accessed via the gap behind the oven. In these cases, we highly recommend that an access cover be fitted on the first section of the flue in order to clean the flue socket.

If the oven has a hatch at the back, use this as an access to clean the flue socket.

In order to gain access for cleaning purposes, it is necessary to unscrew the four screws from the back of the oven and

remove the plate. When you finish cleaning, replace the cover by screwing the 4 screws tight.

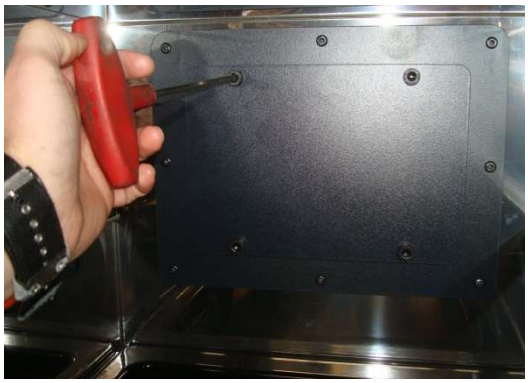

Figure No.17 - Access to the screws to remove the hatch cover

This operation must always be performed when the appliance is cold.

When the flue socket has been cleaned, gather up the soot accumulated at the bottom of the oven and extract it via the hatch located beneath the oven.

Figure No.18 - Accesses via which to clean the flue socket.

4.1.6. Chrome parts

Use a damp cloth with neutral soap to clean the chrome parts and dry immediately. Do not use scouring pads, abrasive products, stripper or acid-based products; they could damage the chrome plating. Moisture can damage chrome.

4.1.7. Brass parts

Use special brass cleaning products available on the market to clean the brass parts.

4.1.8. Enamelled-steel parts

Use a damp cloth with neutral soap to clean the enamelled-steel parts and dry immediately. Do not use abrasive, corrosive, chlorine-based or acid-based products to clean the enamelled-steel parts; they could damage the enamel.

4.1.9. Oven

Use a slightly damp cloth (or cloth with neutral soap) to clean the oven and dry immediately. Stainless-steel ovens may turn yellowish as a result of heat. Do not use abrasive, corrosive, chlorine-based or acid-based products; they could damage the enamel.

Be particularly careful to avoid spilling acid or alkaline products (tomato sauce, lemon juice, vinegar, ceramic hob cleaner, etc.) on the enamelled surfaces of the

kitchen stove; they may damage the enamel coating.

4.2. Maintenance of the chimney flue

VERY IMPORTANT: In order to avoid incidents (chimney fires, etc.), it is necessary to perform maintenance and cleaning operations on a regular basis; if the appliance is used often, then the chimney and the flue connector piping must be swept several times a year.

In the event of fire in the chimney, close the flue draught, close doors and windows, remove embers from the firebox, block the connection hole with damp cloths and call the fire brigade.

4.3. Important advice

Lacunza recommends that only Lacunza-authorised replacement parts be used.

Lacunza accepts no liability for any modification to the product which it has not authorised.

This appliance is a heat-producing appliance and contact may lead to burns.

This appliance may remain HOT for a period of time after it has gone out. MAKE SURE THAT SMALL CHILDREN DO NOT GO NEAR IT.

5. TROUBLESHOOTING

This symbol means that a qualified professional should be called to perform the operation.

Problem	Probable causes		Solution
The fire does not light properly The fire does not stay alight	Green or damp wood		Use hard woods, cut at least 2 years ago and stored in a sheltered, ventilated place
	The logs are too large		Use crumpled paper or firelighters and dry wood chips to light the fire. Use split logs to keep the fire going
	Poor-quality wood		Use hard woods which produce heat and embers (chestnut, ash, maple, birch, elm, beech, etc.)
	Insufficient primary air		Open the primary- and secondary-air intakes completely, or even open the door slightly. Open the outdoor-air inlet grille
	Insufficient updraught		Check that the draught is not blocked. De-soot if necessary. Check that the flue is in perfect condition (airtight, insulated, dry, etc.)
The fire flames up too much	Excessive primary air		Close the primary- and secondary-air intakes partially or totally
	Excessive updraught		Install a draught damper
Smoke given off on lighting	Poor-quality wood		Do not continually burn chips, carpentry scraps (plywood, pallets, etc.)
	Cold flue		Heat up the flue by burning a piece of paper in the firebox.
Smoke during burning	The room is at low pressure		In rooms with Controlled Mechanical Ventilation, leave an outdoor window ajar until the fire is fully alight.
	Too little wood loaded		Load as recommended. Loads notably smaller than those recommended lead to low smoke temperature and downdraught.
	Insufficient updraught		Check the condition of the flue and insulation. Check that the piping is not blocked. Clean mechanically if necessary
	Wind enters the flue		Install an anti-downdraught system (Cowl) at the top of the chimney
Does not warm up enough	The room is at low pressure		In rooms with Controlled Mechanical Ventilation, there must be an outdoor-air inlet
	Poor-quality wood		Only use the recommended fuel
Water condenses (after the appliance has been lit more than 3 or 4 times)	Too little wood loaded		Load as recommended. Loads notably smaller than those recommended lead to low smoke temperature and condensation.
	Green or damp wood		Use hard woods, cut at least 2 years ago and stored in a sheltered, ventilated place.
	Condition of the flue		Lengthen the flue (5-6 metres minimum). Insulate the flue properly. Check the airtightness of the flue/appliance.

6. BASIC BREAKDOWNS

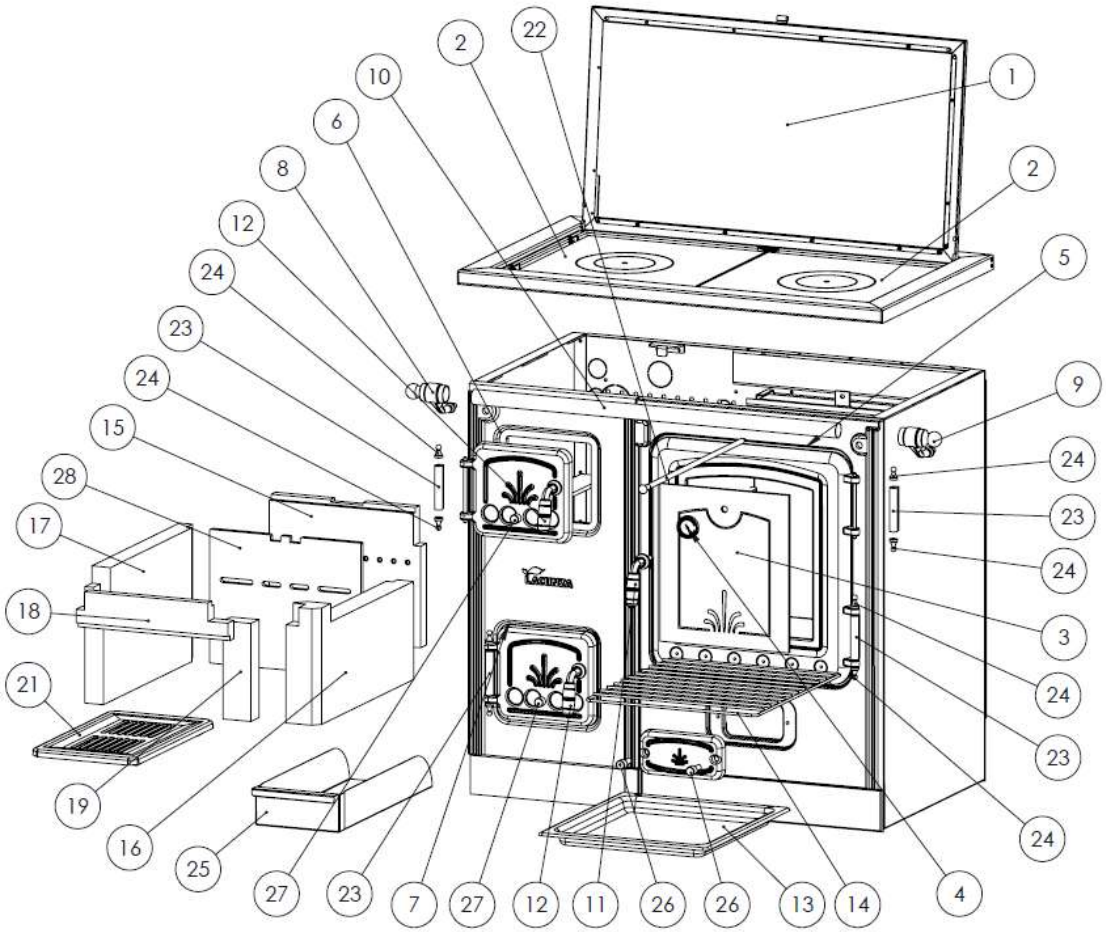

		Lis T Nº5 (75cm)	Lis T Nº7 (90cm)	Lis T Nº8 (100cm)
Numero	**Denominación**	**Ref. Pieza**	**Ref. Pieza**	**Ref. Pieza**
1	Cristal Encimera Vitro	501000000126	501000000124	501000000219
2	Protección grande con arandelas "esmaltadas"	NO	NO	501000000322 (1unid)
2	Protección mediana con arandelas "esmaltadas"	NO	501000000323 (2unid)	501000000323 (1unid)
2	Protección pequeña con arandelas "esmaltadas"	501000000324 (2unid)	NO	NO
3	Cristal puerta Horno Plata	501150000002	501160000002	501170000003
3	Cristal puerta Horno Latón	508150000002	508160000002	501000000011
4	Termómetro horno Cromado	500000000072	500000000072	500000000072
4	Termómetro horno Latón	501000000021	501000000021	501000000021
5	Cordón Puerta Horno (2 metros de Ø6mm)	500900000008	500900000008	500900000008
6	Cordón Puerta Hogar (1 metro de Ø6mm)	500900000008	500900000008	500900000008
7	Cordón Puerta Cenicero (1 metro de Ø6mm)	500900000008	500900000008	500900000008
8	Soporte barra Izdo. Cromado	501000000258	501000000258	501000000258
8	Soporte barra Izdo. Latón	501000000180	501000000180	501000000180
9	Soporte barra Dcho. Cromado	501000000257	501000000257	501000000257
9	Soporte barra Dcho. Latón	501000000179	501000000179	501000000179
10	Barra Cromada	500000000050	501220000001	500000000024
10	Barra Latón	508020000001	508060000001	508070000001
11	Manilla Puerta Horno Cromo	501000000265	501000000265	501000000265
11	Manilla Puerta Horno Latón	501000000060	501000000060	501000000060
12	Manilla Puerta Leña-Cenicero Cromo	501000000266	501000000266	501000000266
12	Manilla Puerta Leña-Cenicero Latón	501000000063	501000000063	501000000063
13	Bandeja esmaltada	501000000001	501000000002	501000000002
14	Bandeja varilla	501000000003	501000000004	501000000004
15	Vermiculita Trasera hogar	5011500011	5010500001	5010500001
16	Refractario hogar Derecho	501160000010	501160000010	501160000010
17	Refractario hogar izquierdo	501160000009	501160000009	501160000009
18	Refractario Delantero superior	501000000351	501000000351	501000000351
19	Refractario delantero derecho	NO	501000000352	501000000352
20	Juego completo refractario hogar	501160000008	501000000331	501000000331
21	Parrilla hogar	501000000904	501000000904	501000000904
22	Varilla tiro directo	500000000006	500000000006	500000000006
23	Bisagra Cromada	501000000372	501000000372	501000000372
23	Bisagra Latón	501000000008	501000000008	501000000008
24	Tapón puertas Cromado	501000000248	501000000248	501000000248
24	Tapón puertas latón	501000000831	501000000831	501000000831
25	Cajetín cenicero	501000000296	501000000296	501000000296
26	Tornillo Portezuela Cromado	501160000003	501160000003	501160000003
26	Tornillo Portezuela Latón	501000000213	501000000213	501000000213
27	Tornillo Registro Puerta Cromado	501160000004	501160000004	501160000004
27	Tornillo Registro Puerta Latón	501160000005	501160000005	501160000005
28	Chapa Trasera hogar	5011500010	5010500000	5010500000

7. PRODUCT RECYCLING

The recycling of the appliance is the exclusive responsibility of the owner, who must act in compliance with the laws in force in his country regarding safety, respect and protection of the environment. At the end of its useful life, the product must not be disposed of with urban waste.

It can be delivered to the specific selective collection centers set up by the municipalities, or to retailers who offer this service. The selective disposal of the product avoids possible negative consequences for the environment and for health and makes it possible to recover the materials of which it is composed, thus obtaining significant savings in terms of energy and resources.

It can be disassembled (the parts are assembled with screws or rivets) and the components can be deposited in their corresponding recycling channels. The components of the appliance are: steel, cast iron, glass, insulating materials, electrical material, etc.

8. DECLARATION OF PERFORMANCE

LACUNZA
Natural comfort

ES FR *EN* IT PT *DE*

N.º CO-S-001

DECLARACIÓN DE PRESTACIONES
Conforme al R. E. Productos Construcción (UE) Nº 305/2011
DÉCLARATION DE PERFORMANCE
Selon le Réglement (UE) Nº 305/2011
DECLARATION OF PERFORMANCE
According to Regulation (UE) Nº 305/2011

DICHIARAZIONE DI PRESTAZIONE
In base al Regolamento (UE) Nº 305/2011
DECLARAÇAO DE PRESTAÇÕES
Em base com o Regulamento (UE) Nº 305/2011
LEISTUNGSERKLÄRUNG
Gemäß R. E. Bauprodukte (EU) Nr. 305/2011

1 **Código de identificación única del producto tipo:** Code d'identification unique du produit type: *Unique identification code of the product-type:* Codice di identificazione unico del prodotto-tipo: Código de identificação único do produto-tipo: *Eindeutiger Kenncode des Produkttyps:*	LIS 5T
2 **Usos previstos:**	Cocina de carga manual, alimentada con combustibles sólidos, cuya función es cocinar y calefactar edificios residenciales
Usage(s) prévu(s):	Cuisine alimentée par des combustibles solides, dont la fonction est de cuisiner et de chauffer des bâtiments résidentiels.
Intended use/es:	Solid fuel cooker, the function of which is to cook and heat residential buildings.
Usi previsti:	Cucina alimentata da combustibili solidi, la cui funzione è quella di cucinare e riscaldare gli edifici residenziali.
Utilização(ões) prevista(s):	Cozinha alimentada a combustíveis sólidos, cuja função é cozinhar e aquecer edifícios de habitação.
Verwendungszweck(e):	Mit festen Brennstoffen betriebene Küche, deren Funktion darin besteht, Wohngebäude zu kochen und zu heizen.
3 **Fabricante:** Fabricant: *Manufacturer:*	**Fabbricante:** Fabricant: *Hersteller:* LACUNZA KALOR GROUP S.A.L. Pol. Ind. Ibarrea 5A 31800 Alsasua (Navarra) (Spain) T. (0034) 948563511 comercial@lacunza.net www.lacunza.net
5 **Sistemas de evaluación y verificación de la constancia de las prestaciones (EVCP):** Système(s) d'évaluation et de vérification de la constance des performances: *System/s of AVCP:*	**Sistemi di VVCP:** Sistema(s) de avaliação e verificação da regularidade do desempenho (AVCP): *System zur Bewertung und Überprüfung der Leistungsbeständigkeit:* 3
6a **Norma armonizada:** Norme harmonisée: *Harmonised standard:*	**Norma armonizzata:** Norma harmonizada: *Harmonisierte Norm:* EN-16510-2-3 (2022)
6a **Organismos notificados:** Organisme(s) notifié(s): *Notified body/ies:*	**Organismi notificati:** Organismo(s) notificado(s): *Notifizierte Stelle(n):* STROJÍRENSKÝ ZKUŠEBNÍ ÚSTAV, S.P. Engineering Test Institute, Public Enterprise Hudcova 424/56b, 621 00 Brno, Czech Republic. Notified Body 1015

LACUNZA KALOR GROUP

7	Características esenciales Caractéristiques essentielles *Essential features*	Caratteristiche essenziali Características essenciais *Unerlässliche Eigenschaften*	Prestaciones declaradas: Performance(s) déclarée(s): *Declared performance/s:*	Prestazioni dichiarate: Desempenho(s) declarado(s): *Erklärte Leistung(en):*

Protección de materiales combustibles
Protection des matériaux combustibles
Protection of combustible materials

Protezione dei materiali combustibili
Proteção de materiais combustíveis
Schutz brennbarer Materialien

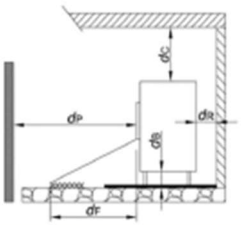

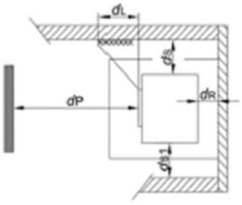

dS =	200 mm	dL =	1500 mm
dS1 =	200 mm	dC =	800 mm
dR =	200 mm	dF =	1500 mm
dP =	200 mm	dB =	0 mm

	A	B
Prestación Declarada a Potencia Calorífica: Performance déclarée à la puissance thermique: *Declared Performance at Heating Power:* Prestazioni dichiarate alla potenza termica: Desempenho declarado na potência de aquecimento: *Angegebene Leistung bei:*	Nominal Nominale *Nominal* Nominale Nominal *Nennheizleistung*	A carga parcial Á charge partielle *At partial load* A carico parziale Com carga parcial *Teillast-Heizleistung*
Emisión. Émission. *Emission.* **Emissione.** Emissão. *Emission* CO_{nom} (13%O_2) / CO_{part} (13%O_2)	A 1419 mg/m³	B NPD
Emisión. Émission. *Emission.* **Emissione.** Emissão. *Emission* NOx_{nom} (13%O_2) / NOx_{part} (13%O_2)	A 116 mg/m³	B NPD
Emisión. Émission. *Emission.* **Emissione.** Emissão. *Emission* OGC_{nom} (13%O_2) / OGC_{part} (13%O_2)	A 80 mg/m³	B NPD
Emisión. Émission. *Emission.* **Emissione.** Emissão. *Emission* PM_{nom} (13%O_2) / PM_{part} (13%O_2)	A 33 mg/m³	B NPD
Temperatura de salida de gases de combustión (TSnom/TSpart) Température de sortie des gaz de combustión (TSnom/TSpart) *Combustion gas outlet temperature* (TSnom/TSpart) Temperatura uscita gas di combustione (TSnom/TSpart) Temperatura de saída do gás de combustão (TSnom/TSpart) *Verbrennungsgasaustrittstemperatur* (TSnom/TSpart)	A 259 ºC	B NPD
Tiro mínimo (Pnom/Ppart) Tirage minimum (Pnom/Ppart) *Minimum depression* Depressione minima (Pnom/Ppart) Depressão mínima (Pnom/Ppart) *Minimale depression* (Pnom/Ppart)	A 11 Pa	B NPD
Caudal másico de los gases de combustión ($Øf,g_{nom}$/$Øf,g_{part}$) Débit massique des gaz de combustion ($Øf,g_{nom}$/$Øf,g_{part}$) *Mass flow rate of combustion gases* ($Øf,g_{nom}$/$Øf,g_{part}$) Portata massica dei gas di combustione ($Øf,g_{nom}$/$Øf,g_{part}$) Taxa de fluxo de massa de gases de combustão ($Øf,g_{nom}$/$Øf,g_{part}$) *Massenstrom der Verbrennungsgase* ($Øf,g_{nom}$/$Øf,g_{part}$)	A 13 g/s	B NPD
Seguridad contra incendios de instalaciones en una chimenea (T_{class}) Sécurité incendie des installations dans une cheminée (T_{class}) *Fire safety of installations in a chimney* (T_{class}) Sicurezza antincendio delle installazioni (T_{class}) Segurança contra incêndio de instalações em chaminé (T_{class}) *Brandschutz von Anlagen in einem Schornstein* (T_{class})	T400	

Potencia de calefacción (Pnom/Ppart) Puissance de chauffe (Pnom/Ppart) *Heating power* (Pnom/Ppart)	**Potenza di riscaldamento** (Pnom/Ppart) Potência de aquecimento (Pnom/Ppart) *Heizleistung* (Pnom/Ppart)	A	9 kW	B	NPD
Potencia de calentamiento de agua (PWnom/PWpart) Pussance de chauffage de l'eau (PWnom/PWpart) *Water heating power* (PWnom/PWpart) **Potenza di riscaldamento del l'acqua** (PWnom/PWpart) Potência de aquecimento (PWnom/PWpart) *Wasserheizleistung* (PWnom/PWpart)		A	0 kW	B	NPD
Eficiencia (ηnom/ηpart) Efficacité (ηnom/ηpart) *Efficiency* (ηnom/ηpart)	**Efficienza** (ηnom/ηpart) Eficiência (ηnom/ηpart) *Effizienz* (ηnom/ηpart)	A	76 %	B	NPD
Eficiencia de calefacción estacional (ηs) Efficacité du chauffage saisonnier (ηs) *Seasonal heating efficiency* (ηs)	**Efficienza térmica stagionale** (ηs) Eficiência de aquecimento sazonal (ηs) *Saisonale Heizeffizienz* (ηs)	66			
Índice eficiencia energética (EEI) Indice d'efficacité énergétique (EEI) *Energy efficiency index* (EEI)	**Indice di efficienza energetica (EEI)** Índice de eficiência energética (EEI) *Energieeffizienzindex* (EEI)	100			
Clase Classe *Class*	**Classe** Classe *Klasse*	A			
Consumo de energía eléctrica *(elmáx / elmín)* Consommation d'énergie électrique *(elmáx / elmín)* *Electrical energy consumption (elmáx / elmín)* **Consumo di energia elettrica** *(elmáx / elmín)* Consumo de energia elétrica *(elmáx / elmín)* *Elektrischer Energieverbrauch (elmáx / elmín)*		A	0 kW	B	0 kW
Consumo de energía modo espera (elsb) Consommation d'énergie en veille (elsb) *Standby power consumption* (elsb)	**Consumo energético in standby (elsb)** Consumo de energia em espera (elsb) *Standby-Stromverbrauch* (elsb)	0 kW			
Sostenibilidad medioambiental La durabilité environnementale *Environmental sustainability*	**Sostenibilità ambientale** Sustentabililidade ambiental *Umweltverträglichkeit*				

Las prestaciones del producto identificado anteriormente son conformes con el conjunto de las prestaciones declaradas.
Les performances du produit identifié ci-dessus sont conformes à toutes les performances déclarées.
The performances of the product identified above are in accordance with all the declared performances.

Le prestazioni del prodotto sopra identificato sono conformi a tutte le prestazioni dichiarate.
Os desempenhos do produto acima identificados estão de acordo com todos os desempenhos declarados.
Die oben genannten Leistungen des Produkts entsprechen allen erklärten Leistungen.

La presente declaración de prestaciones se emite, de conformidad con el Reglamento (UE) nº 305/2011, bajo la sola responsabilidad del fabricante arriba identificado.
Cette déclaration des performances est établie, conformément au Règlement (UE) n° 305/2011, sous la seule responsabilité du fabricant identifié ci-dessus.
This declaration of performance is issued, in accordance with Regulation (EU) No. 305/2011, under the sole responsibility of the manufacturer identified above.

La presente dichiarazione di prestazione viene rilasciata, in conformità al Regolamento (UE) n. 305/2011, sotto la responsabilità esclusiva del produttore sopra identificato.
Esta declaração de desempenho é emitida, de acordo com o Regulamento (UE) n.º 305/2011, sob a exclusiva responsabilidade do fabricante acima identificado.
Die Erstellung dieser Leistungserklärung erfolgt gemäß Verordnung (EU) Nr. 305/2011 in alleiniger Verantwortung des oben genannten Herstellers.

LACUNZA
Natural comfort
LACUNZA KALOR GROUP S.A.L.
Pol. Ind. Ibarrea 5A 31800
Alsasua (Navarra) (Spain)
T. (0034) 948563511
comercial@lacunza.net
www. lacunza.net

Firmado por y en nombre del fabricante por:
Signé pour le fabricant et en son nom par:
Signed for and on behalf of the manufacturer by:
Firmato a nome e per conto del fabbricante da:
Assinado por e em nome do fabricante por:
Unterzeichnet für den Hersteller und im Namen des Herstellers von :

ALSASUA (Navarra, Spain) a 28/11/2024

Igor Ruiz de Alegria
Director Gerente de Negocio

LACUNZA
Natural comfort

ES FR *EN* IT PT *DE*

N.º CO-S-002

DECLARACIÓN DE PRESTACIONES
Conforme al R. E. Productos Construcción (UE) Nº 305/2011

DÉCLARATION DE PERFORMANCE
Selon le Réglement (UE) Nº 305/2011

DECLARATION OF PERFORMANCE
According to Regulation (UE) Nº 305/2011

DICHIARAZIONE DI PRESTAZIONE
In base al Regolamento (UE) Nº 305/2011

DECLARAÇAO DE PRESTAÇÕES
Em base com o Regulamento (UE) Nº 305/2011

LEISTUNGSERKLÄRUNG
Gemäß R. E. Bauprodukte (EU) Nr. 305/2011

1 **Código de identificación única del producto tipo:** Code d'identification unique du produit type: *Unique identification code of the product-type:* **Codice di identificazione unico del prodotto-tipo:** Código de identificação único do produto-tipo: *Eindeutiger Kenncode des Produkttyps:*	LIS 7T
2 **Usos previstos:**	**Cocina de carga manual, alimentada con combustibles sólidos, cuya función es cocinar y calefactar edificios residenciales**
Usage(s) prévu(s):	**Cuisine alimentée par des combustibles solides, dont la fonction est de cuisiner et de chauffer des bâtiments résidentiels.**
Intended use/es:	**Solid fuel cooker, the function of which is to cook and heat residential buildings.**
Usi previsti:	**Cucina alimentata da combustibili solidi, la cui funzione è quella di cucinare e riscaldare gli edifici residenziali.**
Utilização(ões) prevista(s):	**Cozinha alimentada a combustíveis sólidos, cuja função é cozinhar e aquecer edifícios de habitação.**
Verwendungszweck(e):	**Mit festen Brennstoffen betriebene Küche, deren Funktion darin besteht, Wohngebäude zu kochen und zu heizen.**
3 **Fabricante:** Fabricant: *Manufacturer:* **Fabbricante:** Fabricant: *Hersteller:*	**LACUNZA KALOR GROUP S.A.L.** **Pol. Ind. Ibarrea 5A 31800** **Alsasua (Navarra) (Spain)** **T. (0034) 948563511** **comercial@lacunza.net** **www.lacunza.net**
5 **Sistemas de evaluación y verificación de la constancia de las prestaciones (EVCP):** Système(s) d'évaluation et de vérification de la constance des performances: *System/s of AVCP:* **Sistemi di VVCP:** Sistema(s) de avaliação e verificação da regularidade do desempenho (AVCP): *System zur Bewertung und Überprüfung der Leistungsbeständigkeit:*	3
6a **Norma armonizada:** Norme harmonisée: *Harmonised standard:* **Norma armonizzata:** Norma harmonizada: *Harmonisierte Norm:*	EN-16510-2-3 (2022)
6a **Organismos notificados:** Organisme(s) notifié(s): *Notified body/ies:* **Organismi notificati:** Organismo(s) notificado(s): *Notifizierte Stelle(n):*	**STROJÍRENSKÝ ZKUŠEBNÍ ÚSTAV, S.P.** **Engineering Test Institute, Public Enterprise** **Hudcova 424/56b, 621 00 Brno, Czech Republic.** **Notified Body 1015**

7	Características esenciales Caractéristiques essentielles *Essential features*	Caratteristiche essenziali Características essenciais *Unerlässliche Eigenschaften*	Prestaciones declaradas: Performance(s) déclarée(s): *Declared performance/s:*	Prestazioni dichiarate: Desempenho(s) declarado(s): *Erklärte Leistung(en):*

Protección de materiales combustibles
Protection des matériaux combustibles
Protection of combustible materials

Protezione dei materiali combustibili
Proteção de materiais combustíveis
Schutz brennbarer Materialien

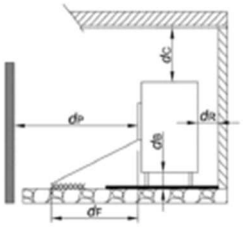

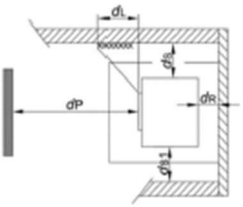

d_S =	200 mm	d_L =	1500 mm
d_{S1} =	200 mm	d_C =	800 mm
d_R =	200 mm	d_F =	1500 mm
d_P =	200 mm	d_B =	0 mm

	A	B
Prestación Declarada a Potencia Calorífica: Performance déclarée à la puissance thermique: *Declared Performance at Heating Power:* Prestazioni dichiarate alla potenza termica: Desempenho declarado na potência de aquecimento: *Angegebene Leistung bei:*	Nominal Nominale *Nominal* Nominale Nominal *Nennheizleistung*	A carga parcial Á charge partielle *At partial load* A carico parziale Com carga parcial *Teillast-Heizleistung*
Emisión. Émission. *Emission.* **Emissione.** Emissão. *Emission* CO_{nom} (13%O_2) / CO_{part} (13%O_2)	A 1420 mg/m³	B NPD
Emisión. Émission. *Emission.* **Emissione.** Emissão. *Emission* NOx_{nom} (13%O_2) / NOx_{part} (13%O_2)	A 120 mg/m³	B NPD
Emisión. Émission. *Emission.* **Emissione.** Emissão. *Emission* OGC_{nom} (13%O_2) / OGC_{part} (13%O_2)	A 80 mg/m³	B NPD
Emisión. Émission. *Emission.* **Emissione.** Emissão. *Emission* PM_{nom} (13%O_2) / PM_{part} (13%O_2)	A 34 mg/m³	B NPD
Temperatura de salida de gases de combustión (TSnom/TSpart) Température de sortie des gaz de combustión (TSnom/TSpart) *Combustion gas outlet temperature* (TSnom/TSpart) Temperatura uscita gas di combustione (TSnom/TSpart) Temperatura de saída do gás de combustão (TSnom/TSpart) *Verbrennungsgasaustrittstemperatur* (TSnom/TSpart)	A 258 ºC	B NPD
Tiro mínimo (Pnom/Ppart) Depressione minima (Pnom/Ppart) Tirage minimum (Pnom/Ppart) Depressão mínima (Pnom/Ppart) *Minimum depression* *Minimale depression* (Pnom/Ppart)	A 12 Pa	B NPD
Caudal másico de los gases de combustión ($Øf,g_{nom}$/$Øf,g_{part}$) Débit massique des gaz de combustion ($Øf,g_{nom}$/$Øf,g_{part}$) *Mass flow rate of combustion gases* ($Øf,g_{nom}$/$Øf,g_{part}$) Portata massica dei gas di combustione ($Øf,g_{nom}$/$Øf,g_{part}$) Taxa de fluxo de massa de gases de combustão ($Øf,g_{nom}$/$Øf,g_{part}$) *Massenstrom der Verbrennungsgase* ($Øf,g_{nom}$/$Øf,g_{part}$)	A 14 g/s	B NPD
Seguridad contra incendios de instalaciones en una chimenea (T_{class}) Sécurité incendie des installations dans une cheminée (T_{class}) *Fire safety of installations in a chimney* (T_{class}) Sicurezza antincendio delle installazioni (T_{class}) Segurança contra incêndio de instalações em chaminé (T_{class}) *Brandschutz von Anlagen in einem Schornstein* (T_{class})	T400	

Potencia de calefacción (Pnom/Ppart) Puissance de chauffe (Pnom/Ppart) *Heating power* (Pnom/Ppart)	Potenza di riscaldamento (Pnom/Ppart) Potência de aquecimento (Pnom/Ppart) *Heizleistung* (Pnom/Ppart)	A	10 kW	B	NPD
Potencia de calentamiento de agua (PWnom/PWpart) Puissance de chauffage de l'eau (PWnom/PWpart) *Water heating power* (PWnom/PWpart) Potenza di riscaldamento del l'acqua (PWnom/PWpart) Potência de aquecimento (PWnom/PWpart) *Wasserheizleistung* (PWnom/PWpart)		A	0 kW	B	NPD
Eficiencia (ηnom/ηpart) Efficacité (ηnom/ηpart) *Efficiency* (ηnom/ηpart)	Efficienza (ηnom/ηpart) Eficiência (ηnom/ηpart) *Effizienz* (ηnom/ηpart)	A	76 %	B	NPD
Eficiencia de calefacción estacional (ηs) Efficacité du chauffage saisonnier (ηs) *Seasonal heating efficiency* (ηs)	Efficienza térmica stagionale (ηs) Eficiência de aquecimento sazonal (ηs) *Saisonale Heizeffizienz* (ηs)		66		
Índice eficiencia energética (EEI) Indice d'efficacité énergétique (EEI) *Energy efficiency index* (EEI)	Indice di efficienza energetica (EEI) Índice de eficiência energética (EEI) *Energieeffizienzindex* (EEI)		100		
Clase Classe *Class*	Classe Classe *Klasse*		A		
Consumo de energía eléctrica *(elmáx / elmín)* Consommation d'énergie électrique *(elmáx / elmín)* *Electrical energy consumption (elmáx / elmín)* Consumo di energia elettrica *(elmáx / elmín)* Consumo de energia elétrica *(elmáx / elmín)* *Elektrischer Energieverbrauch (elmáx / elmín)*		A	0 kW	B	0 kW
Consumo de energía modo espera (elsb) Consommation d'énergie en veille (elsb) *Standby power consumption* (elsb)	Consumo energético in standby (elsb) Consumo de energia em espera (elsb) *Standby-Stromverbrauch* (elsb)		0 kW		
Sostenibilidad medioambiental La durabilité environnementale *Environmental sustainability*	Sostenibilità ambientale Sustentabilidade ambiental *Umweltverträglichkeit*				

Las prestaciones del producto identificado anteriormente son conformes con el conjunto de las prestaciones declaradas.
Les performances du produit identifié ci-dessus sont conformes à toutes les performances déclarées.
The performances of the product identified above are in accordance with all the declared performances.

Le prestazioni del prodotto sopra identificato sono conformi a tutte le prestazioni dichiarate.
Os desempenhos do produto acima identificados estão de acordo com todos os desempenhos declarados.
Die oben genannten Leistungen des Produkts entsprechen allen erklärten Leistungen.

La presente declaración de prestaciones se emite, de conformidad con el Reglamento (UE) nº 305/2011, bajo la sola responsabilidad del fabricante arriba identificado.
Cette déclaration des performances est établie, conformément au Règlement (UE) n° 305/2011, sous la seule responsabilité du fabricant identifié ci-dessus.
This declaration of performance is issued, in accordance with Regulation (EU) No. 305/2011, under the sole responsibility of the manufacturer identified above.

La presente dichiarazione di prestazione viene rilasciata, in conformità al Regolamento (UE) n. 305/2011, sotto la responsabilità esclusiva del produttore sopra identificato.
Esta declaração de desempenho é emitida, de acordo com o Regulamento (UE) n.º 305/2011, sob a exclusiva responsabilidade do fabricante acima identificado.
Die Erstellung dieser Leistungserklärung erfolgt gemäß Verordnung (EU) Nr. 305/2011 in alleiniger Verantwortung des oben genannten Herstellers.

LACUNZA
Natural comfort
LACUNZA KALOR GROUP S.A.L.
Pol. Ind. Ibarrea 5A 31800
Alsasua (Navarra) (Spain)
T. (0034) 948563511
comercial@lacunza.net
www. lacunza.net

Firmado por y en nombre del fabricante por:
Signé pour le fabricant et en son nom par:
Signed for and on behalf of the manufacturer by:
Firmato a nome e per conto del fabbricante da:
Assinado por e em nome do fabricante por:
Unterzeichnet für den Hersteller und im Namen des Herstellers von :

ALSASUA (Navarra, Spain) a 28/11/2024

Igor Ruiz de Alegria
Director Gerente de Negocio

LACUNZA
Natural comfort

ES FR *EN* IT PT *DE*

N.º CO-S-003

DECLARACIÓN DE PRESTACIONES
Conforme al R. E. Productos Construcción (UE) Nº 305/2011

DÉCLARATION DE PERFORMANCE
Selon le Réglement (UE) Nº 305/2011

DECLARATION OF PERFORMANCE
According to Regulation (UE) Nº 305/2011

DICHIARAZIONE DI PRESTAZIONE
In base al Regolamento (UE) Nº 305/2011

DECLARAÇAO DE PRESTAÇÕES
Em base com o Regulamento (UE) Nº 305/2011

LEISTUNGSERKLÄRUNG
Gemäß R. E. Bauprodukte (EU) Nr. 305/2011

1 **Código de identificación única del producto tipo:** Code d'identification unique du produit type: *Unique identification code of the product-type:* **Codice di identificazione unico del prodotto-tipo:** Código de identificação único do produto-tipo: *Eindeutiger Kenncode des Produkttyps:*	LIS 8T
2 **Usos previstos:**	**Cocina de carga manual, alimentada con combustibles sólidos, cuya función es cocinar y calefactar edificios residenciales**
Usage(s) prévu(s):	**Cuisine alimentée par des combustibles solides, dont la fonction est de cuisiner et de chauffer des bâtiments résidentiels.**
Intended use/es:	**Solid fuel cooker, the function of which is to cook and heat residential buildings.**
Usi previsti:	**Cucina alimentata da combustibili solidi, la cui funzione è quella di cucinare e riscaldare gli edifici residenziali.**
Utilização(ões) prevista(s):	**Cozinha alimentada a combustíveis sólidos, cuja função é cozinhar e aquecer edifícios de habitação.**
Verwendungszweck(e):	**Mit festen Brennstoffen betriebene Küche, deren Funktion darin besteht, Wohngebäude zu kochen und zu heizen.**
3 **Fabricante:** Fabricant: *Manufacturer:*	**Fabbricante:** Fabricant: *Hersteller:*	**LACUNZA KALOR GROUP S.A.L.** **Pol. Ind. Ibarrea 5A 31800** **Alsasua (Navarra) (Spain)** **T. (0034) 948563511** **comercial@lacunza.net** **www.lacunza.net**
5 **Sistemas de evaluación y verificación de la constancia de las prestaciones (EVCP):** Système(s) d'évaluation et de vérification de la constance des performances: *System/s of AVCP:*	**Sistemi di VVCP:** Sistema(s) de avaliação e verificação da regularidade do desempenho (AVCP): *System zur Bewertung und Überprüfung der Leistungsbeständigkeit:*	3
6a **Norma armonizada:** Norme harmonisée: *Harmonised standard:*	**Norma armonizzata:** Norma harmonizada: *Harmonisierte Norm:*	EN-16510-2-3 (2022)
6a **Organismos notificados:** Organisme(s) notifié(s): *Notified body/ies:*	**Organismi notificati:** Organismo(s) notificado(s): *Notifizierte Stelle(n):*	**STROJÍRENSKÝ ZKUŠEBNÍ ÚSTAV, S.P.** **Engineering Test Institute, Public Enterprise** **Hudcova 424/56b, 621 00 Brno, Czech Republic.** **Notified Body 1015**

7	Características esenciales Caractéristiques essentielles *Essential features*	Caratteristiche essenziali Características essenciais *Unerlässliche Eigenschaften*	Prestaciones declaradas: Performance(s) déclarée(s): *Declared performance/s:*	Prestazioni dichiarate: Desempenho(s) declarado(s): *Erklärte Leistung(en):*

Protección de materiales combustibles
Protection des matériaux combustibles
Protection of combustible materials

Protezione dei materiali combustibili
Proteção de materiais combustíveis
Schutz brennbarer Materialien

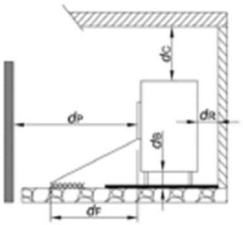

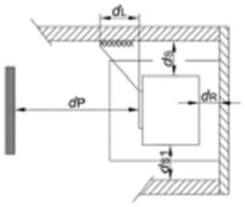

d_S =	200 mm	d_L =	1500 mm
d_{S1} =	200 mm	d_C =	800 mm
d_R =	200 mm	d_F =	1500 mm
d_P =	200 mm	d_B =	0 mm

	A	B
Prestación Declarada a Potencia Calorífica: Performance déclarée à la puissance thermique: *Declared Performance at Heating Power:* Prestazioni dichiarate alla potenza termica: Desempenho declarado na potência de aquecimento: *Angegebene Leistung bei:*	Nominal Nominale *Nominal* Nominale Nominal *Nennheizleistung*	A carga parcial Á charge partielle *At partial load* A carico parziale Com carga parcial *Teillast-Heizleistung*
Emisión. Émission. *Emission.* Emissione. Emissão. *Emission* CO_{nom} (13%O_2) / CO_{part} (13%O_2)	A 1420 mg/m³	B NPD
Emisión. Émission. *Emission.* Emissione. Emissão. *Emission* NOx_{nom} (13%O_2) / NOx_{part} (13%O_2)	A 120 mg/m³	B NPD
Emisión. Émission. *Emission.* Emissione. Emissão. *Emission* OGC_{nom} (13%O_2) / OGC_{part} (13%O_2)	A 78 mg/m³	B NPD
Emisión. Émission. *Emission.* Emissione. Emissão. *Emission* PM_{nom} (13%O_2) / PM_{part} (13%O_2)	A 34 mg/m³	B NPD
Temperatura de salida de gases de combustión (TSnom/TSpart) Température de sortie des gaz de combustión (TSnom/TSpart) *Combustion gas outlet temperature* (TSnom/TSpart) Temperatura uscita gas di combustione (TSnom/TSpart) Temperatura de saída do gás de combustão (TSnom/TSpart) *Verbrennungsgasaustrittstemperatur* (TSnom/TSpart)	A 256 ºC	B NPD
Tiro mínimo (Pnom/Ppart) Tirage minimum (Pnom/Ppart) *Minimum depression* Depressione minima (Pnom/Ppart) Depressão mínima (Pnom/Ppart) *Minimale depression* (Pnom/Ppart)	A 13 Pa	B NPD
Caudal másico de los gases de combustión ($Øf_{,gnom}$/$Øf_{,gpart}$) Débit massique des gaz de combustion ($Øf_{,gnom}$/$Øf_{,gpart}$) *Mass flow rate of combustion gases* ($Øf_{,gnom}$/$Øf_{,gpart}$) Portata massica dei gas di combustione ($Øf_{,gnom}$/$Øf_{,gpart}$) Taxa de fluxo de massa de gases de combustão ($Øf_{,gnom}$/$Øf_{,gpart}$) *Massenstrom der Verbrennungsgase* ($Øf_{,gnom}$/$Øf_{,gpart}$)	A 15 g/s	B NPD
Seguridad contra incendios de instalaciones en una chimenea (T_{class}) Sécurité incendie des installations dans une cheminée (T_{class}) *Fire safety of installations in a chimney* (T_{class}) Sicurezza antincendio delle installazioni (T_{class}) Segurança contra incêndio de instalações em chaminé (T_{class}) *Brandschutz von Anlagen in einem Schornstein* (T_{class})	T400	

Potencia de calefacción (Pnom/Ppart) Puissance de chauffe (Pnom/Ppart) *Heating power* (Pnom/Ppart)	Potenza di riscaldamento (Pnom/Ppart) Potência de aquecimento (Pnom/Ppart) *Heizleistung* (Pnom/Ppart)	A	11 kW	B	NPD
Potencia de calentamiento de agua (PWnom/PWpart) Puissance de chauffage de l'eau (PWnom/PWpart) *Water heating power* (PWnom/PWpart) Potenza di riscaldamento del l'acqua (PWnom/PWpart) Potência de aquecimento (PWnom/PWpart) *Wasserheizleistung* (PWnom/PWpart)		A	0 kW	B	NPD
Eficiencia (ηnom/ηpart) Efficacité (ηnom/ηpart) *Efficiency* (ηnom/ηpart)	Efficienza (ηnom/ηpart) Eficiência (ηnom/ηpart) *Effizienz* (ηnom/ηpart)	A	78 %	B	NPD
Eficiencia de calefacción estacional (ηs) Efficacité du chauffage saisonnier (ηs) *Seasonal heating efficiency* (ηs)	Efficienza térmica stagionale (ηs) Eficiência de aquecimento sazonal (ηs) *Saisonale Heizeffizienz* (ηs)	68			
Índice eficiencia energética (EEI) Indice d'efficacité énergétique (EEI) *Energy efficiency index* (EEI)	Indice di efficienza energetica (EEI) Índice de eficiência energética (EEI) *Energieeffizienzindex* (EEI)	103			
Clase Classe *Class*	Classe Classe *Klasse*	A			
Consumo de energía eléctrica *(elmáx / elmín)* Consommation d'énergie électrique *(elmáx / elmín)* *Electrical energy consumption (elmáx / elmín)* Consumo di energia elettrica *(elmáx / elmín)* Consumo de energia elétrica *(elmáx / elmín)* *Elektrischer Energieverbrauch (elmáx / elmín)*		A	0 kW	B	0 kW
Consumo de energía modo espera (elsb) Consommation d'énergie en veille (elsb) *Standby power consumption* (elsb)	Consumo energético in standby (elsb) Consumo de energia em espera (elsb) *Standby-Stromverbrauch* (elsb)	0 kW			
Sostenibilidad medioambiental La durabilité environnementale *Environmental sustainability*	Sostenibilità ambientale Sustentabilidade ambiental *Umweltverträglichkeit*				

Las prestaciones del producto identificado anteriormente son conformes con el conjunto de las prestaciones declaradas.
Les performances du produit identifié ci-dessus sont conformes à toutes les performances déclarées.
The performances of the product identified above are in accordance with all the declared performances.

Le prestazioni del prodotto sopra identificato sono conformi a tutte le prestazioni dichiarate.
Os desempenhos do produto acima identificados estão de acordo com todos os desempenhos declarados.
Die oben genannten Leistungen des Produkts entsprechen allen erklärten Leistungen.

La presente declaración de prestaciones se emite, de conformidad con el Reglamento (UE) nº 305/2011, bajo la sola responsabilidad del fabricante arriba identificado.
Cette déclaration des performances est établie, conformément au Règlement (UE) n° 305/2011, sous la seule responsabilité du fabricant identifié ci-dessus.
This declaration of performance is issued, in accordance with Regulation (EU) No. 305/2011, under the sole responsibility of the manufacturer identified above.

La presente dichiarazione di prestazione viene rilasciata, in conformità al Regolamento (UE) n. 305/2011, sotto la responsabilità esclusiva del produttore sopra identificato.
Esta declaração de desempenho é emitida, de acordo com o Regulamento (UE) n.º 305/2011, sob a exclusiva responsabilidade do fabricante acima identificado.
Die Erstellung dieser Leistungserklärung erfolgt gemäß Verordnung (EU) Nr. 305/2011 in alleiniger Verantwortung des oben genannten Herstellers.

LACUNZA
Natural comfort
LACUNZA KALOR GROUP S.A.L.
Pol. Ind. Ibarrea 5A 31800
Alsasua (Navarra) (Spain)
T. (0034) 948563511
comercial@lacunza.net
www. lacunza.net

Firmado por y en nombre del fabricante por:
Signé pour le fabricant et en son nom par:
Signed for and on behalf of the manufacturer by:
Firmato a nome e per conto del fabbricante da:
Assinado por e em nome do fabricante por:
Unterzeichnet für den Hersteller und im Namen des Herstellers von :

ALSASUA (Navarra, Spain) a 28/11/2024

Igor Ruiz de Alegria
Director Gerente de Negocio

9. CE MARK

CE 07	LACUNZA KALOR GROUP S.A.L. Pol. Ind. Ibarrea 5A 31800 Alsasua (Navarra) (Spain) www.lacunza.net
	DoP: **CO-S-001** — **EN 16510-2-3 (2022)**

Marca, Marque, Mark, Marca, Marca, Markierung: **LACUNZA**
Tipo, Type, Type, Tipo, Tipo, Nett: **Cocina, Cuisinière, Cucina, Cooker, Cozinha, Holzokocher**
Modelo, Modèle, Model, Modello, Modelo, Modell: **LIS 5T**

Organismo notificado: Organisme notifié: Notified body: Organismi notificati: Organismo notificado: Notifizierte Stelle: SZU Nº 1015

Aparato Tipo, Type d'appareil, Apparatus Type, Tipo di apparecchio, Tipo de aparelho, Gerätetyp: B

Estufa de calefacción residencial, alimentada con combustibles sólidos. Poêles de chauffage domestiques à combustible solid. Residential solid fuel burning Roomheaters. Stufa di riscaldamento domestici a combustibile solido. Fogão de aquecimento residencial, alimentado por combustíveis sólidos. Häusliche Raumheizer für feste Brennstoffe.

Características esenciales, Caractéristiques essentielles, Essential features, Caratteristiche essenziali, , Características essenciais, Unerlässliche Eigenschaften	**Prestaciones, Performance, Prestazione, Services, Desempenho, Leistungen**
Capacidad para soportar carga, Capacité de chargement, Load bearing capacity, Capacità di carico, Capacidade de carga, Tragfähigkeit	NPD
Protección de materiales combustibles. Protection des matériaux combustibles. Protection of combustible materials. Protezione dei materiali combustibili. Proteção de materiais combustíveis. Schutz brennbarer Materialien 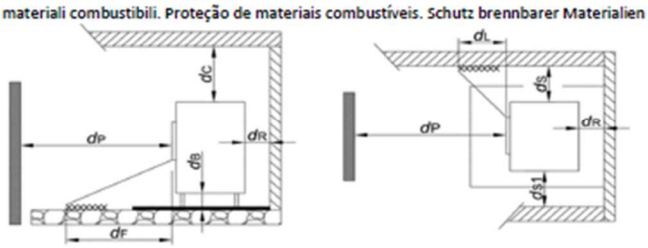	dS = 200mm dS1 = 200mm dR = 200mm dP = 200mm dL = 1500mm dC = 800mm dF = 1500mm dB = 0mm

Prestación Declarada a Potencia Calorífica: Performance déclarée à la puissance thermique: Declared Performance at Heating Power: Prestazioni dichiarate alla potenza termica: Desempenho declarado na potência de aquecimento: Angegebene Leistung bei:	Nominal Nominale *Nominal* Nominale Nominal *Nennheizleistung*	A carga parcial Á charge partielle *At partial load* A carico parziale Com carga parcial *Teillast-Heizleistung*
Emisión. Émission. Emission. Emissione. Emissão. Emission **COnom (13%O2) / COpart (13%O2)**	**1419 mg/m³**	**NPD**
Emisión. Émission. Emission. Emissione. Emissão. Emission **NOxnom (13%O2)/NOxpart (13%O2)**	**116 mg/m³**	**NPD**
Emisión. Émission. Emission. Emissione. Emissão. Emission **OGCnom (13%O2)/OGCpart (13%O2)**	**80 mg/m³**	**NPD**
Emisión. Émission. Emission. Emissione. Emissão. Emission **PMnom (13%O2) / PMpart (13%O2)**	**33 mg/m³**	**NPD**
Temperatura de salida de gases de combustión. Température de sortie des gaz de combustión. Combustion gas outlet temperature. Temperatura uscita gas di combustione. Temperatura de saída do gás de combustão. Verbrennungsgasaustrittstemperatur. **(TSnom/TSpart)**	**259 ºC**	**NPD**
Tiro mínimo. Tirage mínimum. Minimum depression. Depressione mínima. Depressão mínima. Minimale depression **(Pnom/Ppart)**	**11 Pa**	**NPD**
Caudal másico de los gases de combustión. Débit massique des gaz de combustion. Mass flow rate of combustion gases. Portata massica dei gas di combustion. Taxa de fluxo de massa de gases de combustão. Massenstrom der Verbrennungsgase **(Øf,gnom/Øf,gpart)**	**13 g/s**	**NPD**
Seguridad contra incendios de instalaciones en una chimenea. Sécurité incendie des installations dans une cheminée. Fire safety of installations in a chimney. Sicurezza antincendio delle installazioni. Segurança contra incêndio de instalações em chaminé.Brandschutz von Anlagen in einem Schornstein **(Tclass)**	**T400**	
Potencia de calefacción. Puissance de chauffe. Heating power. Potenza di riscaldamento. Potência de aquecimento. Heizleistung **(Pnom/Ppart)**	**9 kW**	**2NPD**
Potencia de calentamiento de agua. Pussance de chauffage de l'eau. Water heating power.Potenza di riscaldamento del l'acqua. Potência de aquecimento. Wasserheizleistung **(PWnom/PWpart)**	**0 kW**	**NPD**
Eficiencia. Efficacité. Efficiency. Efficienza. Eficiência. Effizienz **(ηnom/ηpart)**	**76 %**	**NPD**
Eficiencia de calefacción estacional. Efficacité du chauffage saisonnier. Seasonal heating efficiency. Efficienza térmica stagionale. Eficiência de aquecimento sazonal. Saisonale Heizeffizienz **(ηs)**	**66 %**	
Índice eficiencia energética. Indice d'efficacité énergétique. Energy efficiency index. Indice di efficienza energética. Índice de eficiência energética. Energieeffizienzindex **(EEI)**	**100**	
Clase. Classe. Class. Classe. Classe.Klasse	**A**	
Consumo de energía eléctrica. Consommation d'énergie électrique. Electrical energy consumption. Consumo di energia elettrica. Consumo de energia elétrica. Elektrischer Energieverbrauch **(elmáx / elmín)**	**NPD**	**NPD**
Consumo de energía modo espera. Consommation d'énergie en veille. Standby power consumption. Consumo energético in standby. Consumo de energia em espera. Standby-Stromverbrauch **(elsb)**	**NPD**	

CE 07	LACUNZA KALOR GROUP S.A.L. Pol. Ind. Ibarrea 5A 31800 Alsasua (Navarra) (Spain) www.lacunza.net
	DoP: **CO-S-002** — **EN 16510-2-3 (2022)**

Marca, Marque, Mark, Marca, Marca, Markierung: **LACUNZA**
Tipo, Type, Type, Tipo, Tipo, Nett: **Cocina, Cuisinière, Cucina, Cooker, Cozinha, Holzokocher**
Modelo, Modèle, Model, Modello, Modelo, Modell: **LIS 7T**

Organismo notificado: Organisme notifié: Notified body: Organismi notificati: Organismo notificado: Notifizierte Stelle: SZU Nº 1015

Aparato Tipo, Type d'appareil, Apparatus Type, Tipo di apparecchio, Tipo de aparelho, Gerätetyp: B

Estufa de calefacción residencial, alimentada con combustibles sólidos. Poêles de chauffage domestiques à combustible solid. Residential solid fuel burning Roomheaters. Stufa di riscaldamento domestici a combustibile solido. Fogão de aquecimento residencial, alimentado por combustíveis sólidos. Häusliche Raumheizer für feste Brennstoffe.

Características esenciales, Caractéristiques essentielles, Essential features, Caratteristiche essenziali, , Características essenciais, Unerlässliche Eigenschaften	**Prestaciones, Performance, Prestazione, Services, Desempenho, Leistungen**
Capacidad para soportar carga, Capacité de chargement, Load bearing capacity, Capacità di carico, Capacidade de carga, Tragfähigkeit	NPD
Protección de materiales combustibles. Protection des matériaux combustibles. Protection of combustible materials. Protezione dei materiali combustibili. Proteção de materiais combustíveis. Schutz brennbarer Materialien 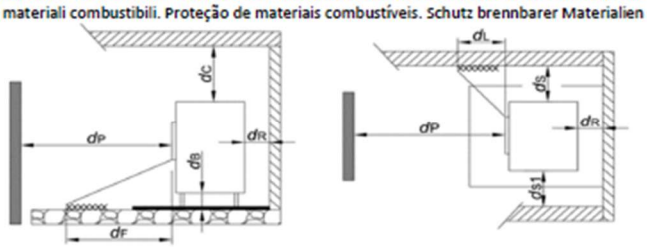	dS = 200mm dS1 = 200mm dR = 200mm dP = 200mm dL = 1500mm dC = 800mm dF = 1500mm dB = 0mm

Prestación Declarada a Potencia Calorífica: Performance déclarée à la puissance thermique: Declared Performance at Heating Power: Prestazioni dichiarate alla potenza termica: Desempenho declarado na potência de aquecimento: Angegebene Leistung bei:	Nominal Nominale *Nominal* Nominale Nominal *Nennheizleistung*	A carga parcial Á charge partielle *At partial load* A carico parziale Com carga parcial *Teillast-Heizleistung*
Emisión. Émission. Emission. Emissione. Emissão. Emission **COnom (13%O2) / COpart (13%O2)**	**1420 mg/m³**	**NPD**
Emisión. Émission. Emission. Emissione. Emissão. Emission **NOxnom (13%O2)/NOxpart (13%O2)**	**120 mg/m³**	**NPD**
Emisión. Émission. Emission. Emissione. Emissão. Emission **OGCnom (13%O2)/OGCpart (13%O2)**	**80 mg/m³**	**NPD**
Emisión. Émission. Emission. Emissione. Emissão. Emission **PMnom (13%O2) / PMpart (13%O2)**	**34 mg/m³**	**NPD**
Temperatura de salida de gases de combustión. Température de sortie des gaz de combustión. Combustion gas outlet temperature. Temperatura uscita gas di combustione. Temperatura de saída do gás de combustão. Verbrennungsgasaustrittstemperatur. **(TSnom/TSpart)**	**258 ºC**	**NPD**
Tiro mínimo. Tirage mínimum. Minimum depression. Depressione minima. Depressão mínima. Minimale depression **(Pnom/Ppart)**	**12 Pa**	**NPD**
Caudal másico de los gases de combustión. Débit massique des gaz de combustion. Mass flow rate of combustion gases. Portata massica dei gas di combustion. Taxa de fluxo de massa de gases de combustão. Massenstrom der Verbrennungsgase **(Øf,gnom/Øf,gpart)**	**14 g/s**	**NPD**
Seguridad contra incendios de instalaciones en una chimenea. Sécurité incendie des installations dans une cheminée. Fire safety of installations in a chimney. Sicurezza antincendio delle installazioni. Segurança contra incêndio de instalações em chaminé.Brandschutz von Anlagen in einem Schornstein **(Tclass)**	**T400**	
Potencia de calefacción. Puissance de chauffe. Heating power. Potenza di riscaldamento. Potência de aquecimento. Heizleistung **(Pnom/Ppart)**	**10 kW**	**2NPD**
Potencia de calentamiento de agua. Puissance de chauffage de l'eau. Water heating power.Potenza di riscaldamento del l'acqua. Potência de aquecimento. Wasserheizleistung **(PWnom/PWpart)**	**0 kW**	**NPD**
Eficiencia. Efficacité. Efficiency. Efficienza. Eficiência. Effizienz **(ηnom/ηpart)**	**76 %**	**NPD**
Eficiencia de calefacción estacional. Efficacité du chauffage saisonnier. Seasonal heating efficiency. Efficienza térmica stagionale. Eficiência de aquecimento sazonal. Saisonale Heizeffizienz **(ηs)**	**66 %**	
Índice eficiencia energética. Indice d'efficacité énergétique. Energy efficiency index. Indice di efficienza energética. Índice de eficiência energética. Energieeffizienzindex **(EEI)**	**100**	
Clase. Classe. Class. Classe. Classe.Klasse	**A**	
Consumo de energía eléctrica. Consommation d'énergie électrique. Electrical energy consumption. Consumo di energia elettrica. Consumo de energia elétrica. Elektrischer Energieverbrauch **(elmáx / elmín)**	**NPD**	**NPD**
Consumo de energía modo espera. Consommation d'énergie en veille. Standby power consumption. Consumo energético in standby. Consumo de energia em espera. Standby-Stromverbrauch **(elsb)**	**NPD**	

CE 07	LACUNZA KALOR GROUP S.A.L. Pol. Ind. Ibarrea 5A 31800 Alsasua (Navarra) (Spain) www.lacunza.net	
	DoP: **CO-S-003**	**EN 16510-2-3 (2022)**

Marca, Marque, Mark, Marca, Marca, Markierung: **LACUNZA**
Tipo, Type, Type, Tipo, Tipo, Nett: **Cocina, Cuisinière, Cucina, Cooker, Cozinha, Holzokocher**
Modelo, Modèle, Model, Modello, Modelo, Modell: **LIS 8T**

Organismo notificado: Organisme notifié: Notified body: Organismi notificati: Organismo notificado: Notifizierte Stelle: SZU Nº 1015

Aparato Tipo, Type d'appareil, Apparatus Type, Tipo di apparecchio, Tipo de aparelho, Gerätetyp: B

Estufa de calefacción residencial, alimentada con combustibles sólidos. Poêles de chauffage domestiques à combustible solid. Residential solid fuel burning Roomheaters. Stufa di riscaldamento domestici a combustibile solido. Fogão de aquecimento residencial, alimentado por combustíveis sólidos. Häusliche Raumheizer für feste Brennstoffe.

Características esenciales, Caractéristiques essentielles, Essential features, Caratteristiche essenziali, , Características essenciais, Unerlässliche Eigenschaften	**Prestaciones, Performance, Prestazione, Services, Desempenho, Leistungen**
Capacidad para soportar carga, Capacité de chargement, Load bearing capacity, Capacità di carico, Capacidade de carga, Tragfähigkeit	NPD
Protección de materiales combustibles. Protection des matériaux combustibles. Protection of combustible materials. Protezione dei materiali combustibili. Proteção de materiais combustíveis. Schutz brennbarer Materialien 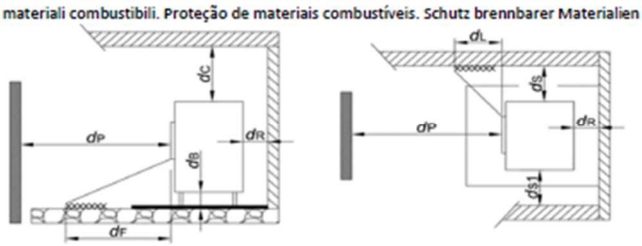	dS = 200mm dS1 = 200mm dR = 200mm dP = 200mm dL = 1500mm dC = 800mm dF = 1500mm dB = 0mm

Prestación Declarada a Potencia Calorífica: Performance déclarée à la puissance thermique: Declared Performance at Heating Power: Prestazioni dichiarate alla potenza termica: Desempenho declarado na potência de aquecimento: Angegebene Leistung bei:	Nominal Nominale *Nominal* Nominale Nominal *Nennheizleistung*	A carga parcial Á charge partielle *At partial load* A carico parziale Com carga parcial *Teillast-Heizleistung*
Emisión. Émission. Emission. Emissione. Emissão. Emission **COnom (13%O2) / COpart (13%O2)**	**1420 mg/m³**	**NPD**
Emisión. Émission. Emission. Emissione. Emissão. Emission **NOxnom (13%O2)/NOxpart (13%O2)**	**120 mg/m³**	**NPD**
Emisión. Émission. Emission. Emissione. Emissão. Emission **OGCnom (13%O2)/OGCpart (13%O2)**	**78 mg/m³**	**NPD**
Emisión. Émission. Emission. Emissione. Emissão. Emission **PMnom (13%O2) / PMpart (13%O2)**	**34 mg/m³**	**NPD**
Temperatura de salida de gases de combustión. Température de sortie des gaz de combustión. Combustion gas outlet temperature. Temperatura uscita gas di combustione. Temperatura de saída do gás de combustão. Verbrennungsgasaustrittstemperatur. **(TSnom/TSpart)**	**256 ºC**	**NPD**
Tiro mínimo. Tirage mínimum. Minimum depression. Depressione mínima. Depressão mínima. Minimale depression **(Pnom/Ppart)**	**13 Pa**	**NPD**
Caudal másico de los gases de combustión. Débit massique des gaz de combustion. Mass flow rate of combustion gases. Portata massica dei gas di combustion. Taxa de fluxo de massa de gases de combustão. Massenstrom der Verbrennungsgase **(Øf,gnom/Øf,gpart)**	**15 g/s**	**NPD**
Seguridad contra incendios de instalaciones en una chimenea. Sécurité incendie des installations dans une cheminée. Fire safety of installations in a chimney. Sicurezza antincendio delle installazioni. Segurança contra incêndio de instalações em chaminé.Brandschutz von Anlagen in einem Schornstein **(Tclass)**	**T400**	
Potencia de calefacción. Puissance de chauffe. Heating power. Potenza di riscaldamento. Potência de aquecimento. Heizleistung **(Pnom/Ppart)**	**11 kW**	**2NPD**
Potencia de calentamiento de agua. Puissance de chauffage de l'eau. Water heating power.Potenza di riscaldamento del l'acqua. Potência de aquecimento. Wasserheizleistung **(PWnom/PWpart)**	**0 kW**	**NPD**
Eficiencia. Efficacité. Efficiency. Efficienza. Eficiência. Effizienz **(ηnom/ηpart)**	**78 %**	**NPD**
Eficiencia de calefacción estacional. Efficacité du chauffage saisonnier. Seasonal heating efficiency. Efficienza térmica stagionale. Eficiência de aquecimento sazonal. Saisonale Heizeffizienz **(ηs)**	**68 %**	
Índice eficiencia energética. Indice d'efficacité énergétique. Energy efficiency index. Indice di efficienza energética. Índice de eficiência energética. Energieeffizienzindex **(EEI)**	**103**	
Clase. Classe. Class. Classe. Classe.Klasse	**A**	
Consumo de energía eléctrica. Consommation d'énergie électrique. Electrical energy consumption. Consumo di energia elettrica. Consumo de energia elétrica. Elektrischer Energieverbrauch **(elmáx / elmín)**	**NPD**	**NPD**
Consumo de energía modo espera. Consommation d'énergie en veille. Standby power consumption. Consumo energético in standby. Consumo de energia em espera. Standby-Stromverbrauch **(elsb)**	**NPD**	

LACUNZA KALOR GROUP S.A.L
Pol. Ind. Ibarrea 5A
31800 Alsasua (Navarra) Spain
Tel.: (00 34) 948 56 35 11
Fax.: (00 34) 948 56 35 05
e-mail: comercial@lacunza.net
Website: www.lacunza.net
EDITION: 9