MAULE

Instruction Book

LACUNZA®

Lacunza congratulates you on your choice.
Certified under ISO 9001, Lacunza guarantees the quality of its appliances and undertakes to meet the needs of its customers.
Confident of the know-how afforded by more than 50 years' experience, Lacunza uses advanced technologies in the design and manufacture of its entire range of appliances. This document will help you install and use your appliance in optimum conditions for your comfort and safety.

CONTENTS

1. PRESENTATION OF THE APPLIANCE 3
1.1. General characteristics 3
1.2. Safety distances 6
2. INSTRUCTIONS FOR THE INSTALLER 7
2.1. Warning to installers 7
2.2. Room for installation 7
2.2.1. Ventilation of the room 7
2.2.2. Location of the appliance in the room 8
2.3. Installation of the appliance 8
2.3.1. Floor 8
2.3.2. Checks before lighting for the first time 8
2.3.3. Height adjustment and levelling the appliance 8
2.3.4. Connection to the flue 8
2.3.5. Preparing the outside air connection 8
2.4. Chimney flue 9
2.4.1. Type of flue 9
2.4.2. Chimney crown 10
3. INSTRUCTIONS OF USE 11
3.1. Fuel 11
3.2. Description of the parts of the appliance 12
3.2.1. Operating components 12
3.3. Lighting 13
3.4. Safety 13
3.5. Loading fuel 13
3.6. Operation 13
3.7. Removing ash 14
3.8. Heating instructions 15
3.9. Deflectors 15
4. MAINTENANCE AND IMPORTANT ADVICE 17
4.1. Maintenance of the appliance 17
4.1.1. Firebox 17

4.1.2. Inside the appliance 17
4.1.3. Flue socket 17
4.1.4. Painted sheet-steel-cast-iron parts 17
4.1.5. Firebox glass 17
4.1.6. Ceramic pieces 17
4.2. Maintenance of the chimney flue 18
4.3. Important advice 18
5. TROUBLESHOOTING 19
6. BASIC BREAKDOWNS 20
7. PRODUCT RECYCLING 22
8. DECLARATION OF PERFORMANCE 23
9. CE MARK 26

1. PRESENTATION OF THE APPLIANCE

For optimum operation of the appliance, we advise you to read this manual carefully before switching on the appliance for the first time. In case of problems or concerns, we urge you to contact your dealer, who will cooperate with you.

In order to improve the product, the manufacturer reserves the right to make changes without notice by updating this document.

This appliance is designed to burn wood in absolutely safe conditions.
WARNING: Faulty installation may have serious consequences.
Installation and all necessary regular maintenance operations must be performed by an authorized installer in full accordance with the specifications set out in the legislation applicable in each country and this instruction book.

1.1. General characteristics

		Unit	MAULE
	Operating appliance	-	Intermittent
	Appliance classification	-	Type BE
	Preferred fuel	-	Wood logs (Humidity<25%)
	Indirect heating functionality	-	NO
Values at Nominal Output	Nominal output to atmosphere (Direct) (P_{nom})	kW	7.2
	Efficiency at P_{nom} (η_{nom})	%	81
	CO emission at 13% O_2 at P_{nom} (CO_{nom})	mg/m³	715
	NO_x emission at 13% O_2 at P_{nom} (NO_{Xnom})	mg/m³	120
	OGC emission at 13% O_2 at P_{nom} (OGC_{nom})	mg/m³	33
	PM emission at 13% O_2 at P_{nom} (PM_{nom})	mg/m³	18
	Optimum flue draught at P_{nom} (p_{nom})	Pa	12
	Gas temperature of flue at P_{nom} (T_{nom})	°C	245
	Gas temperature on the flue socket flange at P_{nom}	°C	294
	Log load frequency at P_{nom}	h	0.85
	Gas mass flow at P_{nom}	g/s	7
	Wood consumption (beech) at P_{nom}	kg/h	1.9
Values at Partial Load Output	Partial load output to atmosphere (Direct) (P_{parc})	kW	2.8
	Efficiency at P_{parc} (η_{parc})	%	78
	CO emission at 13% O_2 at P_{parc} (CO_{parc})	mg/m³	5157
	NO_x emission at 13% O_2 at P_{parc} (NO_{Xparc})	mg/m³	161
	OGC emission at 13% O_2 at P_{parc} (OGC_{parc})	mg/m³	620
	PM emission at 13% O_2 at P_{parc} (PM_{parc})	mg/m³	37
	Optimum flue draught at P_{parc} (p_{parc})	Pa	6
	Gas temperature of flue at P_{parc} (T_{parc})	°C	174
	Log load frequency at P_{parc}	h	0.85
	Chimney temperature class	-	T400
	Dimensions of the firebox		
	Width	mm	572

Depth	mm	383
Useful height	mm	315
Maximum length of the logs	cm	55
Volume heated (45W/m^3) at P_{nom}	m^3	160
Capacity of the ashpit	L	1.5
Weight	kg	145
Flue socket diameter (d_{out})	mm	150
Type of heat output/room temperature control	Single stage heat output, no room temperature control	
Energy efficiency class	-	A+
Energy efficiency index (EEI)	-	107
Seasonal Energy Efficiency of space heating (η_s)	%	71

Note: The values indicated in the above table are based on tests performed in accordance with EN-16510 with logs with no more than 18% humidity and pressure conditions as indicated in each case.

Warning: this appliance is designed and prepared to work with the types of fuel, degree of humidity of the fuel, fuel loads, fuel load frequencies, flue draught and system of installation indicated in this Instruction Book. Failure to respect these conditions may lead to problems with the appliance (deterioration, shorter useful life, etc.) which are not covered by the Lacunza warranty.

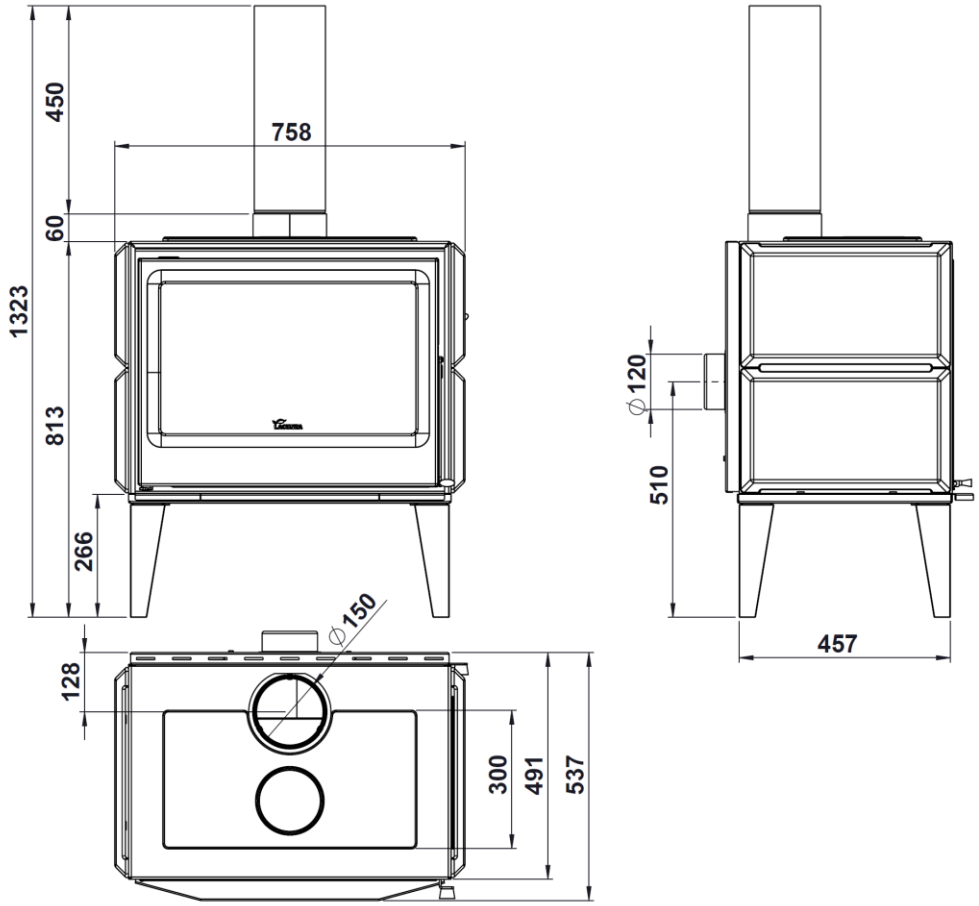

Figure No.1 - Dimensions of the MAULE appliance in mm

1.2. Safety distances

Be sure to respect the appliance installation distances from **combustible materials**. Looking at the appliance head-on: (Distances in mm)

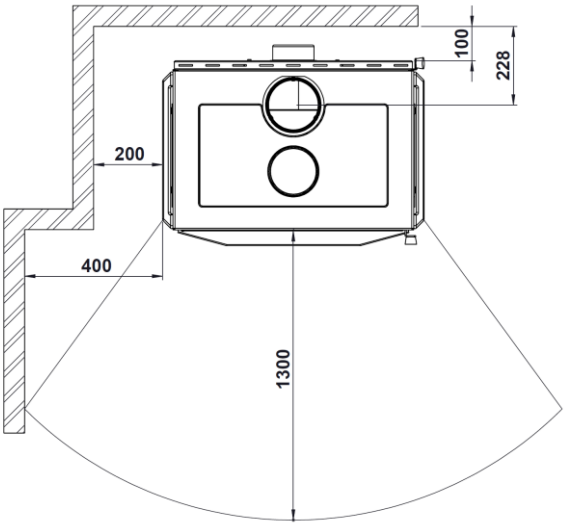

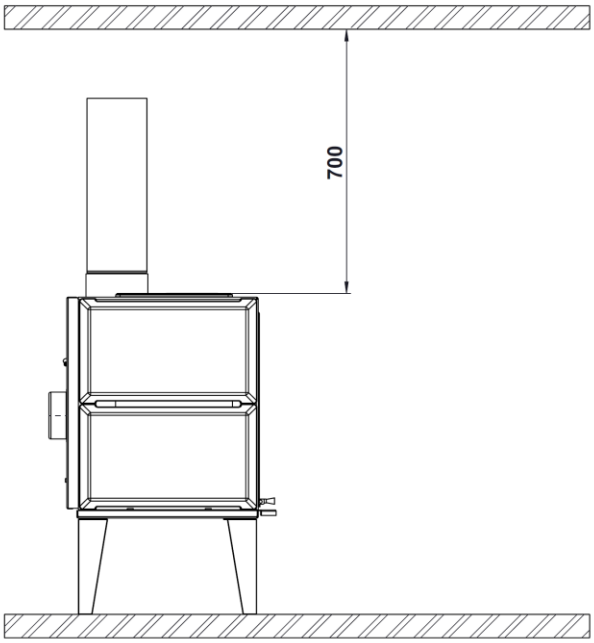

Combustible materials

Bear in mind that it may even be necessary to protect non-combustible material in order to prevent breakage, deformation, etc., as a result of overheating if the non-combustible material is not designed to withstand high temperatures.

2. INSTRUCTIONS FOR THE INSTALLER

2.1. Warning to installers

All local and national regulations, including all those referring to national and European standards, must be observed when installing the appliance.

Installation of the appliance must be performed by an authorised installer.

An incorrectly installed appliance may lead to serious incidents (fires, creation of harmful gases, deterioration of nearby fixtures, etc.).

Lacunza's liability is limited to the supply of the material and does not include installation of the appliance.

2.2. Room for installation

2.2.1. Ventilation of the room

The appliance needs to consume oxygen (air) in order to work properly. Ensure a suitable air supply in the room in which the appliance is fitted. This quantity of oxygen is additional to the oxygen that we need in order to breathe (air renewal).

In order to ensure the high quality of the air you breathe and to avoid potential accidents resulting from high concentrations of the gases produced by combustion (mainly carbon dioxide and carbon monoxide), it is absolutely crucial to ensure the suitable renewal of the air in the room in which the appliance is fitted.

the room must always have at least two permanent grilles or openings to the exterior in order to renew the air (one for intake and the other for extraction).

For the installation of its appliances, Lacunza recommends an additional section for these openings. One of these two grilles must be situated high up in the room (at less than 30 cm from the ceiling) and the other one low down (at less than 30 cm from the floor). Both grilles must open outdoors in order to renew the air in the room with fresh air.

The air inlet grilles must be positioned so that they cannot be blocked or closed accidentally.

The minimum section that each of these grilles must have depends on the nominal output of the appliance in accordance with the following table:

Output of the appliance (kW)	Minimum additional section of each of the grilles (cm^2)
P ≤ 10kW	70
10 < P ≤ 15	90
15 < P ≤ 20	120
20 < P ≤ 25	150
25 < P ≤ 30	180
30 < P ≤ 35	210
P > 35	240

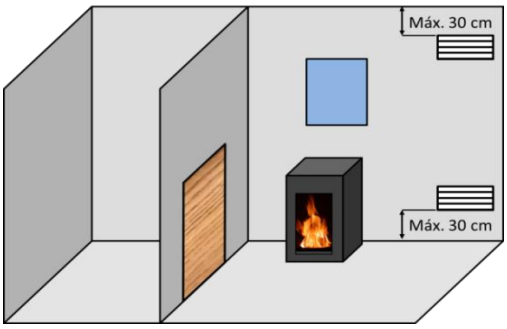

Figure No.2 - Guideline indications for ventilation grilles

In the case of appliances on which it is possible to pipe combustion air in from outdoors (appliances type BE, BF, CA, CM y CC), the specifications described in the Table above are not necessary.

The appliance must always be used with the door closed.

In rooms equipped with Controlled Mechanical Ventilation, the system

extracts and renews the ambient air; in such cases, the room is at slightly low pressure and it is necessary to install a non-closable outside-air inlet with a section of at least 90 cm^2.

2.2.2. Location of the appliance in the room

Choose a location in the room which favours good hot-air distribution by convection and radiation.

2.3. Installation of the appliance

2.3.1. Floor

Make sure that the base can withstand the total constructed weight of the appliance and its casing.

The apparatus should not be placed on combustible material.

2.3.2. Checks before lighting for the first time

- Make sure that the glasses are not broken or damaged.
- Make sure that the flueway is not obstructed with packing or loose parts.
- Check the deflectors are correctly positioned.
- Make sure that the airtight joints on the flue circuit are in perfect condition.
- Make sure that the doors close properly.
- Make sure that all moving parts are fitted in place.

2.3.3. Height adjustment and levelling the appliance

The appliance must be perfectly level, horizontally and vertically, both at the front and on the sides (use a spirit level).

2.3.4. Connection to the flue

The appliance must be connected to the chimney flue using special piping designed to resist the products of combustion (e.g. stainless steel, enamelled steel, etc.).

To connect the flue to the socket flange, insert the piping inside the flange and seal the joint with fire sealant or fire cement to make it completely airtight.

The installer must ensure that the pipe connected to the appliance is well secured and there is no chance of it coming free from its housing (e.g. as a result of dilatation due to temperature, etc.).

2.3.5. Preparing the outside air connection

On this model, it is possible to pipe air to the appliance for combustion straight from outdoors. We recommend that, if possible, air be drawn from outdoors for combustion via a non-closable pipe with a diameter of 120 mm leading to the nozzle on the bottom-front of the appliance.

If the tube is straight, it can have a maximum of 12 meters in length. If you use accessories like elbows, you must subtract the total length (12 meters) 1 meter for each accessory used.

This is the best option because it means that draughts are not created in and oxygen is not consumed from the room in which the appliance is fitted. A further advantage is that there is no danger of downdraught which may hinder the correct updraught of the appliance when an extractor or mechanical ventilation appliance is used in the same room as the central-heating appliance or in another one alongside it.

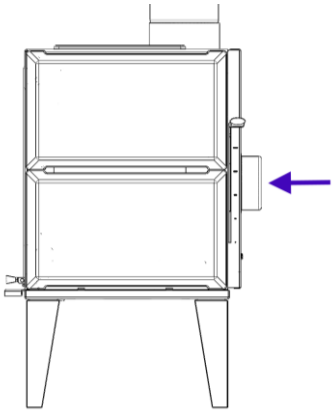

Figure No.3 - Air conduction for the combustion chamber

If this is not possible, ensure that the appliance receives air for combustion.

Outside air connection via the wall

1. Make an opening in the wall (see the measurements of the appliance on the section 1.1 to see the exact position of the hole).
2. Close the air connection hermetically to the wall.

2.4. Chimney flue

The chimney flue must comply with present standards on the installation of chimneys.

In rooms equipped with Controlled Mechanical Ventilation, the ventilation outlet must never be connected to the flue.

The appliance must always have its own chimney flue, never sharing a chimney flue with another appliance.

2.4.1. Type of flue

The flue must be made of special material designed to resist the products of combustion (e.g. stainless steel, enamelled steel, etc.).

Non-central-heating appliances (without back boiler) require an insulated, double-sleeve flue only on those sections that run outdoors or through cold areas. Single piping can be used inside the building, the heat of the gases serving to heat rooms, insulating only those sections where excess temperature may cause damage.

If the chimney is constructed, then it is necessary to pipe and insulate it to ensure correct updraught.

The diameter of the pipe must be the same as the diameter of the flue socket on the appliance over its entire length in order to ensure correct operation.

The flue must prevent the entry of rainwater.

The flue must be clean and airtight over its entire length.

The flue must be at least 6m tall and the chimney cap must not hinder the free release of gases.

If the flue tends to suffer from downdraught, then it is necessary to fit an effective anti-downdraught cowl, a static cowl or a smoke extraction fan, or reshape the chimney.

Never make 90° bends, due to the great loss of draught they cause, and reduce 45° bends down to an absolute minimum. Each 45° bend is equivalent to a 0.5m reduction in flue length. Horizontal flue sections should not be installed because they cut updraught a great deal.

The appliance is designed to operate under controlled draught conditions. The appliance must operate at a chimney draught of between 12Pa and 15Pa. To ensure this draught, an automatic draught moderator must be installed in the flue. Uncontrolled draught operation can lead to quick damage of the appliance, which will not be covered by the warranty.

The flue must not rest its weight on the appliance, as this could damage the worktop.

Bear in mind that high temperatures may be reached in the flue, meaning that it

is essential that insulation be enhanced in sections in which combustible material is present (wooden beams, furniture, etc.). It may even be necessary to protect non-combustible material in order to prevent breakage, deformation, etc., as a result of overheating if the material is not designed to withstand high temperatures.

It must be possible to clean the entire flue, no sections being left inaccessible for cleaning purposes.

2.4.2. Chimney crown

The upper end of the chimney must clear the roof, the roof ridge or any obstacle located on the roof by at least 1m.

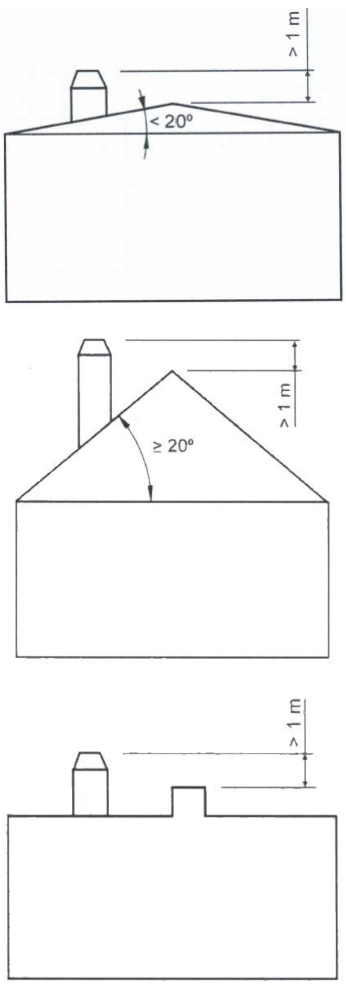

Figure No.4 - Distances between chimney crown and roof ridge

The chimney crown must clear the highest point of any neighbouring building or obstacle located within a 10m radius of the chimney outlet by more than 1m.

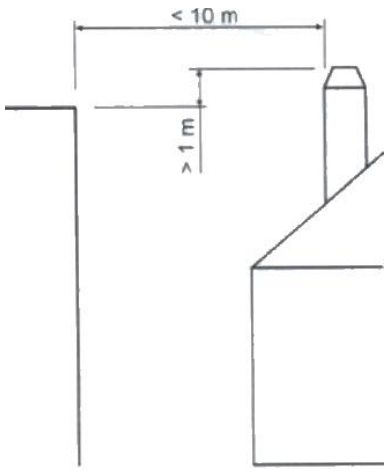

Figure No.5 - Distances between the chimney crown and objects within a 10m radius

The chimney crown must clear any neighbouring building or obstacle located within a radius of 10m to 20m from the chimney outlet.

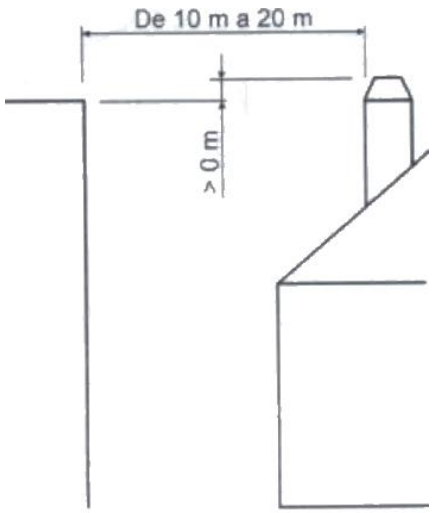

Figure No.6 - Distances between the chimney crown and objects within a radius of between 10 and 20m

3. INSTRUCTIONS OF USE

The manufacturer accepts no liability whatsoever for damage caused to parts as a result of the improper use of non-recommended fuels, modifications made to the appliance or how it is installed.
Only use original replacement parts.

All local and national regulations, including those referring to national and European standards, must be observed when using the appliance.

Heat is diffused by radiation and convection via the front and exterior of the appliance.

3.1. Fuel

This appliance must not be used as an incinerator. Do not use non-recommended fuels.

- Use dry logs (max. 16% humidity), cut at least 2 years ago, clean of resin and stored in a sheltered, ventilated place.
- Use hard woods with high calorie values and good ember production.
- Large logs should be cut to useable lengths before being stored. The logs should have a maximum diameter of 150mm.
- Finely-chopped wood produces greater heat output, but also burns more quickly.

Optimum fuels:

- Hornbeam, Beech.

Other fuels:

- Oak, chestnut, ash, maple, birch, elm, etc.
- Pine and eucalyptus logs are low density and produce very long flames and may cause the parts of the appliance to wear out more quickly than normal.
- Resinous wood may mean that the appliance and the flue need to be cleaned more often.

Non-permitted fuels:

- All types of coal and liquid fuel.
- "Green wood". Green or damp wood reduces the performance of the appliance and leads to soot and tar build-up on the inner walls of the flue, obstructing it.
- "Recovered wood". The burning of treated woods (railway sleepers, telegraph posts, plywood, fibreboard, pallets, etc.) quickly blocks the system (soot and tar build-up), harms the environment (pollution, smells) and may lead to deformation of the firebox due to overheating.
- All materials which are not wood (plastic, spray cans, etc.).
- Never use gasoline, gasoline-type lamp fuel, paraffin, charcoal lighter fluid, ethyl alcohol or similar liquids to ignite or rekindle a fire in the equipment. Keep all such liquids away from the equipment while it is in use.

Green and reprocessed wood may cause chimney fires.

The graph below shows how the humidity of firewood affects its heat output:

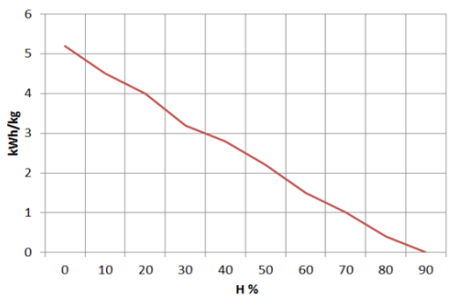

Figure No.7 - Relationship between firewood humidity and heat output.

3.2. Description of the parts of the appliance

3.2.1. Operating components

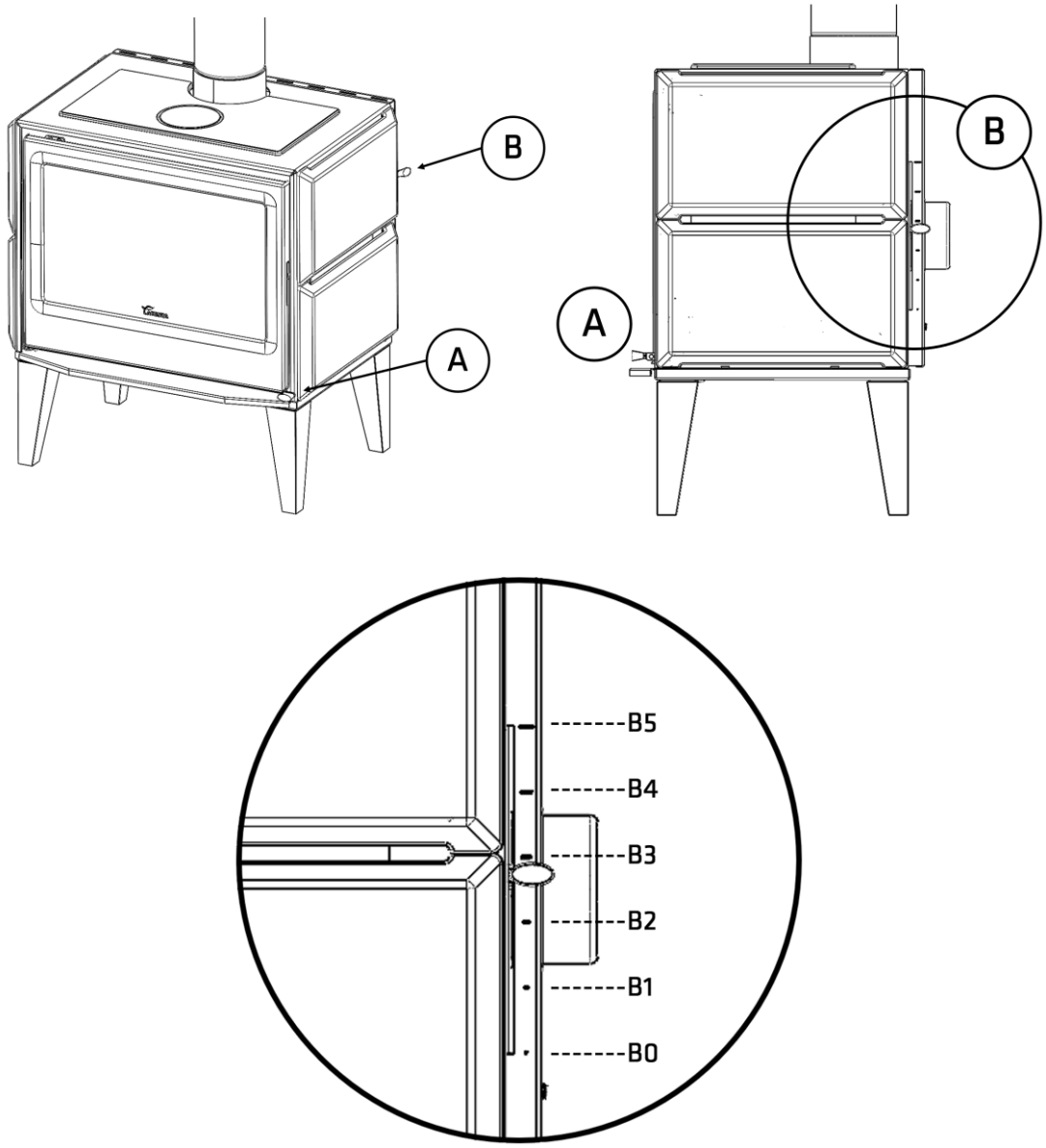

Figure No.8 - Operating components on the appliance

- **A**: Firebox door handle
- **B:** Combustion air intake regulation
  - **B0** close
  - **B5 open**

3.3. Lighting

Use of the appliance in warm weather (warm days, early hours of the afternoon on sunny days) may lead to lighting and updraught problems.

Certain weather conditions, such as fog, ice, humidity entering the flue, etc., may hinder sufficient updraught in the flue and lead to suffocation.

Proceed as follows in order to light the appliance satisfactorily:

- Open the firebox door(s) and open all the firebox air-intake inlets to the full.
- Place paper or a firelighter and some wood chips in the firebox.
- Light the paper or firelighter.
- Leave the door slightly ajar, the width of two or three fingers, for about 15 minutes until the glass warms up.
- The first time the appliance is lit, the fire should be gentle to allow the parts of the appliance to dilate and dry.

Important: The first time it is lit up, the appliance may give off smoke and strange smells. This is not a cause for concern. Open an outdoor window to ventilate the room during the first few hours of operation.

If you notice water around the appliance, this is produced by the condensation of the moisture in the wood on lighting the fire. This condensation will no longer appear when the appliance has been lit three or four times and has adapted to its flue. If it does not disappear, then check the flue draught (length and diameter of the flue, flue insulation, airtightness) and the humidity of the wood used.

3.4. Safety

Do not store combustible materials beneath the appliance.

3.5. Loading fuel

In order to load firewood, open the firebox door gently, preventing the sudden entry of air to the firebox so that smoke does not enter the room that the appliance is installed in.

Perform this operation with the glove to prevent burns to the hands.

The maximum height of the load shall be approximately one third of the height of the firebox.

The minimum interval between loads for nominal heat output is 60 minutes.

Always load with the nominal amount (see table in section 1.1).

For minimum burning (e.g. at night), use thicker logs.

When the firebox is loaded, close the door.

Be careful when placing logs in the firebox on appliances with vermiculite and ceramique interiors. These materials are fragile materials and may crack if knocked. The use of wood with non-recommended humidity levels will quickly damage the vermiculite parts.

3.6. Operation

The appliance should be operated with the door.

For safety reasons, never close all the appliance's combustion-air intakes.

Primary-air intake

To fully open the primary air inlet, the register lever must be moved to position B5. Moving the register to position B4 closes the primary air inlet register.

Secondary-air intake

To start opening this inlet, the register lever must be placed in position B1. By moving the register up from this position to

B5, a gradual opening of the secondary air inlet is achieved.

Opening this inlet, we introduce air into the combustion chamber through the upper part of the firebox door and side doors.

IMPORTANT: Keeping the secondary-air intake open helps keep the door glass cleaner for longer.

Double-combustion air intake

Moviendo la palanca del registro desde la posición B0 hasta B5, se consigue una apertura gradual de la entrada de aire de doble combustión, estando cerrada en la posición B0 y abierta al 100% en la posición B5.

By opening this inlet, air enters the combustion flame, making for more efficient and less polluting combustion because post-combustion takes place, burning the particles which were not burned in the first combustion. This increases the performance of the appliance and reduces emissions.

IMPORTANT: The appliance is exposed to extreme changes in temperature and may, as a result, make noises when in operation. These noises are a natural result of expansion/contraction of the parts which make up the appliance. Do not be alarmed by noises of this kind.

To obtain maximum power, we will open all the air inlet registers by placing the register lever in position B5, and to obtain minimum power we will tend to close the register. For normal use, at nominal power, it is advisable to place the register lever in a medium position, between B2 and B3.

In class B or BE appliances (without combustion air ducting from the street), when the appliance is not in use, the appliance-flue duct assembly may represent a heat leakage route to the street. When the appliance is not in use, it is advisable to leave the air inlet registers to the combustion chamber closed to minimize these energy losses.

3.7. Removing ash

After continuous use of the appliance, it is essential to remove the ash from the fireplace. Remove the ashes with the ashtray when it is cold, or with the help of something to avoid getting burnt (gloves).

Never throw the hot embers in the rubbish bin.

Access the ashtray by opening the door of the fireplace.

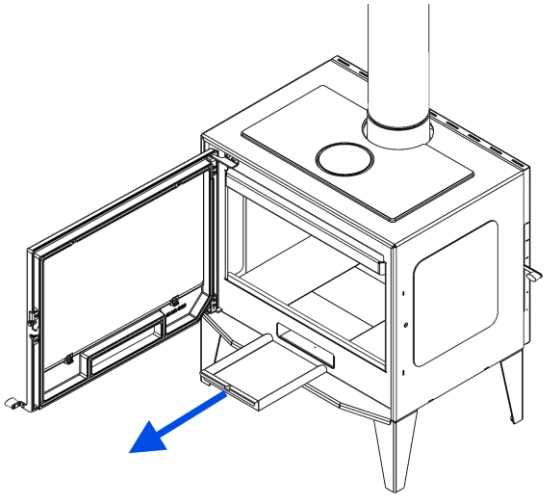

Figure No.9 - Removal of the ashtray

The ashes are removed using the ashtray as a shovel.

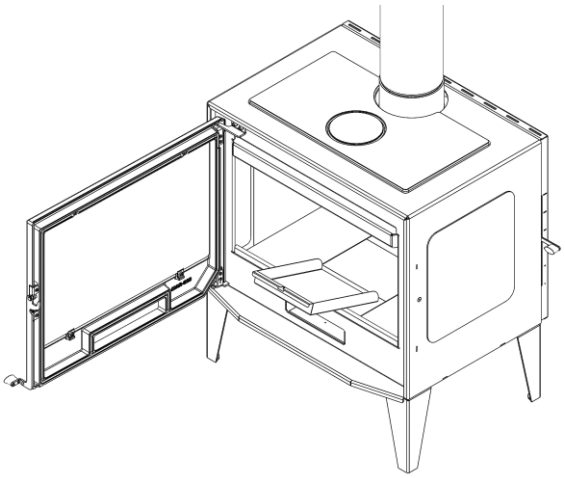

Figure No.10 - Using the ash tray as a shovel

If the grill is installed, the ash will pass through the slots in the grill and fall into the ashtray.

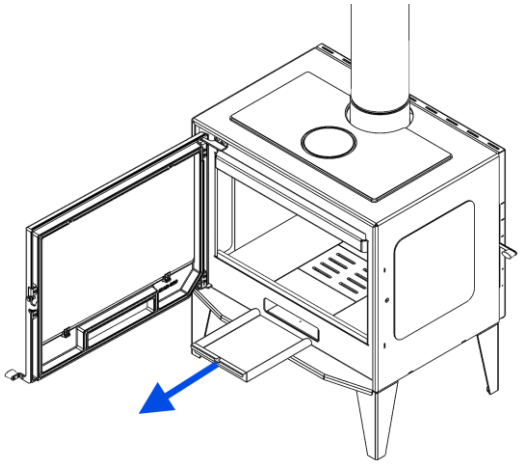

Figure No.11 - Removal of the ashtray

3.8. Heating instructions

The appliance offers the possibility of heating on the worktop.

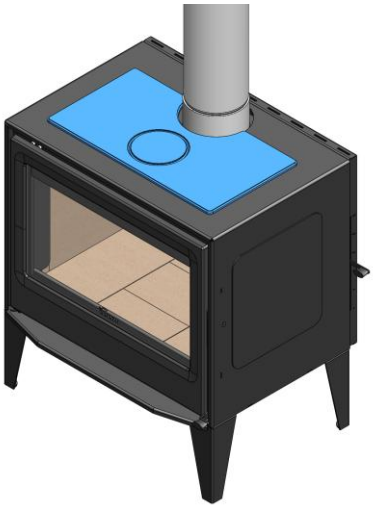

Figure No.12 - Cast iron worktop

The optimum heating zone is the one marked with a circle on the worktop itself.

3.9. Deflectors

The apparatus is fitted with two deflectors, one made of vermiculite in two pieces and another steel deflector on top of the vermiculite.

Dismantling the deflectors

First, the steel reinforcement has to be removed.

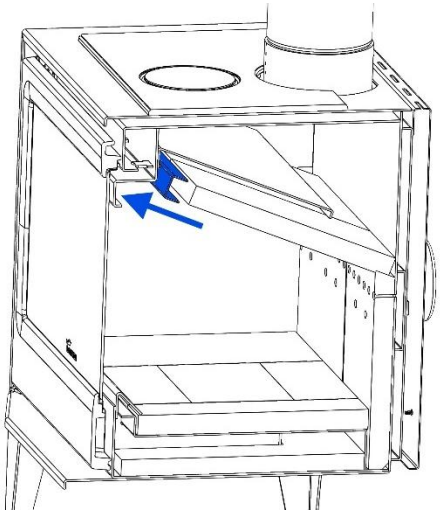

Figure No.13 - Removing the deflector

The two pieces of vermiculite are then removed.

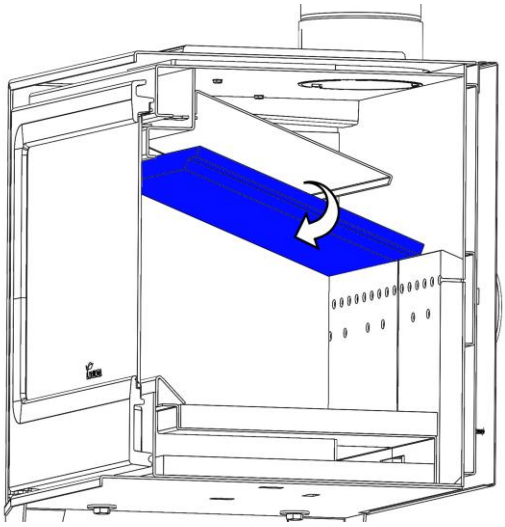

Figure No.14 - Removing the vermiculite pieces

Finally, remove the steel deflector by first moving it upwards to unlatch it.

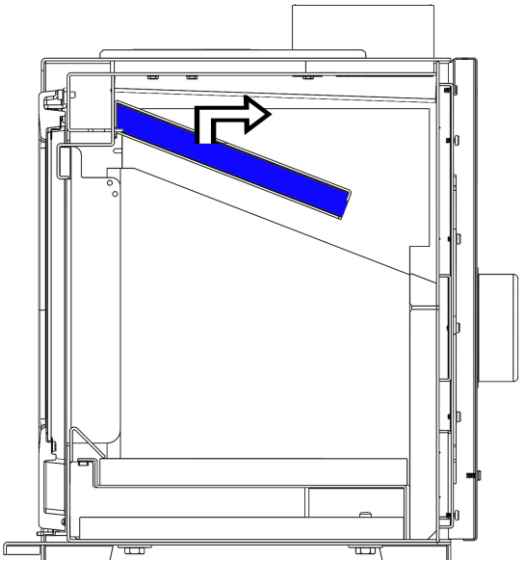

Figure No.15 - Removing the steel deflector

4. MAINTENANCE AND IMPORTANT ADVICE

4.1. Maintenance of the appliance

The appliance, the flue connector piping and the flue must be cleaned regularly, particularly following long periods without use.

4.1.1. Firebox

Clean the firebox area of ash, etc.

4.1.2. Inside the appliance

The inside of the firebox can also be accessed from the bottom by extracting-pushing up the cast-iron grille and removing the ashpit. Clean the area of ash through the hollow left after removal (use a vacuum cleaner if necessary). The cast-iron base can also be extracted if necessary.

Clean the firebox area of ash. Clean the deflectors, where soot may build up.

4.1.3. Flue socket

The flue socket area must be kept clean at all times for the appliance to work properly.

It must be cleaned as often as required. How often it is cleaned depends on how much the appliance is used and the type of fuel employed.

4.1.4. Painted sheet-steel-cast-iron parts.

These parts should be cleaned with a brush or dry cloth. Do not dampen the parts: the steel could rust and the paint could blister and chip. Be particularly careful when cleaning the glass: the liquids used must not dampen the painted steel.

4.1.5. Firebox glass

To keep the glass as clean as possible for as long as possible, the secondary air register should be kept open. However, over the hours of use, the glass may become dirty. To clean it, we will use specific degreasing products or dry cleaning products for this task.

The cleaning should be carried out with the glass cold and taking care not to apply the glass cleaner directly on the glass as, if it comes into contact with the door's closing cord, it may deteriorate. Put the cleaning product on the cloth.

Note: If we use the appliance in draught conditions higher than 15Pa or burn more wood (per hour) than those indicated in table 1.1, we will subject the appliance to working conditions higher than those designed for it. This can lead to aggressive fouling of the glass (white halo), which cannot be cleaned by the traditional method.

Caution, the vitro ceramic glass is prepared to support 700°C. Never let burning woods or combustion flame beating against the glass for prolonged periods of time. In this case, the glass would be submit to temperatures above 750°C, this could change the internal structure of the glass and make it opaque (irreversible phenomenon).

4.1.6. Ceramic pieces

The pieces are made of glazed ceramic, a material that may exhibit craquelure: microcracks in the glaze visible as fine lines. This phenomenon is inherent to the material and does not constitute a manufacturing defect. It can appear in any colour, immediately or over time, and depends on factors such as thermal expansion, humidity and sudden temperature changes.

In light colours, craquelure may be more noticeable due to the accumulation of residue in the micro-cracks. This behaviour does not affect the strength or functionality of the product. It is considered an aesthetic characteristic inherent to handmade ceramics.

4.2. Maintenance of the chimney flue

VERY IMPORTANT: In order to avoid incidents (chimney fires, etc.), it is necessary to perform maintenance and cleaning operations on a regular basis; if the appliance is used often, then the chimney and the flue connector piping must be swept several times a year.

In the event of fire in the chimney, close the flue draught, close doors and windows, remove embers from the firebox, block the connection hole with damp cloths and call de fire brigade.

4.3. Important advice

Lacunza recommends that only Lacunza-authorised replacement parts be used.

Lacunza accepts no liability for any modification to the product which it has not authorised.

This appliance is a heat-producing appliance and contact may lead to burns.

This appliance may remain HOT for a period of time after it has gone out. MAKE SURE THAT SMALL CHILDREN DO NOT GO NEAR IT.

5. TROUBLESHOOTING

This symbol means that a qualified professional should be called to perform the operation.

Problem	Probable causes		Solution
The fire does not light properly **The fire does not stay alight**	Green or damp wood		Use hard woods, cut at least 2 years ago and stored in a sheltered, ventilated place
	The logs are too large		Use crumpled paper or firelighters and dry wood chips to light the fire. Use split logs to keep the fire going
	Poor-quality wood		Use hard woods which produce heat and embers (chestnut, ash, maple, birch, elm, beech, etc.)
	Insufficient primary air		Open the primary- and secondary-air intakes completely, or even open the door slightly. Open the outdoor-air inlet grille
	Insufficient updraught		Check that the draught is not blocked. De-soot if necessary. Check that the flue is in perfect condition (airtight, insulated, dry, etc.)
The fire flames up too much	Excessive primary air		Close the primary- and secondary-air intakes partially or totally
	Excessive updraught		Install a draught damper
Smoke given off on lighting	Poor-quality wood		Do not continually burn chips, carpentry scraps (plywood, pallets, etc.)
	Cold flue		Heat up the flue by burning a piece of paper in the firebox.
Smoke during burning	The room is at low pressure		In rooms with Controlled Mechanical Ventilation, leave an outdoor window ajar until the fire is fully alight.
	Too little wood loaded		Load as recommended. Loads notably smaller than those recommended lead to low smoke temperature and downdraught.
	Insufficient updraught		Check the condition of the flue and insulation. Check that the piping is not blocked. Clean mechanically if necessary
	Wind enters the flue		Install an anti-downdraught system (Cowl) at the top of the chimney
Does not warm up enough	The room is at low pressure		In rooms with Controlled Mechanical Ventilation, there must be an outdoor-air inlet
	Poor-quality wood		Only use the recommended fuel
Water condenses (after the appliance has been lit more than 3 or 4 times)	Too little wood loaded		Load as recommended. Loads notably smaller than those recommended lead to low smoke temperature and condensation.
	Green or damp wood		Use hard woods, cut at least 2 years ago and stored in a sheltered, ventilated place.
	Condition of the flue		Lengthen the flue (5-6 metres minimum). Insulate the flue properly. Check the airtightness of the flue/appliance.

6. BASIC BREAKDOWNS

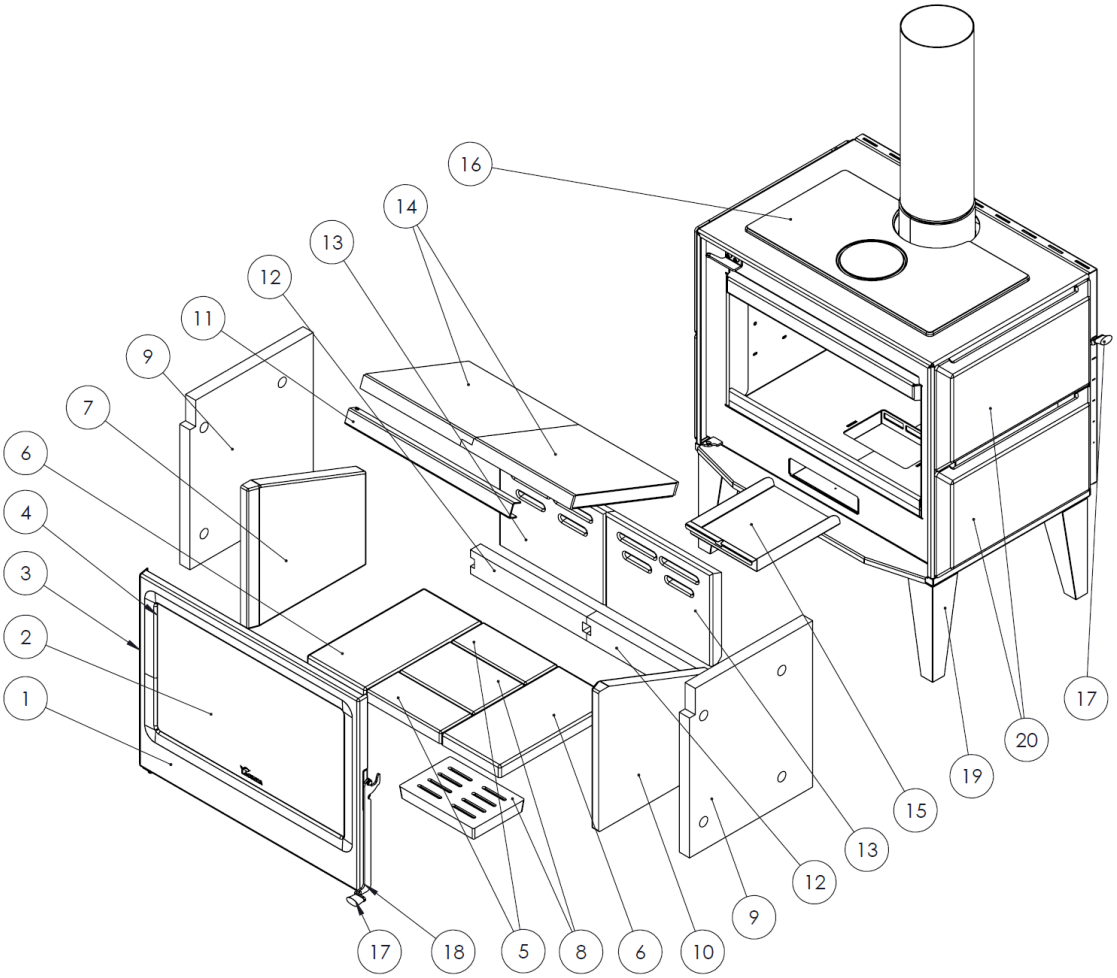

Nº	CÓDIGO	DENOMINACION	CANTIDAD
1	5021200000	Martina-Maule-Laga P/Hogar Completa S/Cristal	1
2	5021200001	Martina-Maule-Laga Cristal C/Junta	1
3	500900000010	Cordón Ø8mm	2.5m
4	500000000510	Cordón plano pelos 8x2mm	2m
5	5021200016	Maule-LagaC base del-tras cerámica blanca	2
6	5021200017	Maule-LagaC Base lateral cerámica blanca	2
7	5021200018	Maule-LagaC lateral izdo cerámica blanca	1
8	5021200019	Maule-LagaC base central	1
	5040000904	Nickel-Adour, Parrilla hogar (opcional)	1
9	5021200020	Maule-Laga vermiculita lateral	2
10	5021200021	Maule-LagaC lateral derecho cerámica blanca	1
11	5000000945	Refuerzo deflector vermiculita	1
12	5021200022	Maule calce inferior para traseras de cerámica	2
13	5021200023	Maule, Trasera cerámica blanca	2

14	5021200024	Maule Laga C, Deflector vermiculita blanca	2
15	502570000000	Cenicero Ocean	1
16	5021200011	Martina-Maule Encimera Fundición	1
17	5021200008	Martina-Maule-Laga pomo negro	2
18	5021200009	Martina manilla chapa (sin pomo)	1
19	5029800005	Pata de madera	4
20	5021200025	Maule, pieza de cerámica exterior	4

7. PRODUCT RECYCLING

The recycling of the appliance is the exclusive responsibility of the owner, who must act in compliance with the laws in force in his country regarding safety, respect and protection of the environment. At the end of its useful life, the product must not be disposed of with urban waste.

It can be delivered to the specific selective collection centers set up by the municipalities, or to retailers who offer this service. The selective disposal of the product avoids possible negative consequences for the environment and for health and makes it possible to recover the materials of which it is composed, thus obtaining significant savings in terms of energy and resources.

It can be disassembled (the parts are assembled with screws or rivets) and the components can be deposited in their corresponding recycling channels. The components of the appliance are: steel, cast iron, glass, insulating materials, electrical material, etc.

8. DECLARATION OF PERFORMANCE

LACUNZA
Natural comfort

ES FR *EN* **IT** PT *DE*

N.º ES -S-057E

DECLARACIÓN DE PRESTACIONES
Conforme al R. E. Productos Construcción (UE) Nº 305/2011

DÉCLARATION DE PERFORMANCE
Selon le Réglement (UE) Nº 305/2011

DECLARATION OF PERFORMANCE
According to Regulation (UE) N° 305/2011

DICHIARAZIONE DI PRESTAZIONE
In base al Regolamento (UE) Nº 305/2011

DECLARAÇAO DE PRESTAÇÕES
Em base com o Regulamento (UE) Nº 305/2011

LEISTUNGSERKLÄRUNG
Gemäß R. E. Bauprodukte (EU) Nr. 305/2011

1	**Código de identificación única del producto tipo:** Code d'identification unique du produit type: *Unique identification code of the product-type:* **Codice di identificazione unico del prodotto-tipo:** Código de identificação único do produto-tipo: *Eindeutiger Kenncode des Produkttyps:*	**MAULE**
2	**Usos previstos:**	**Estufa de calefacción residencial, alimentada con combustibles sólidos.**
	Usage(s) prévu(s):	**Poêles de chauffage domestiques à combustible solid.**
	Intended	**Residential solid fuel burning Roomheaters.**
	Usi previsti:	**Stufa di riscaldamento domestici a combustibile solido.**
	Utilização(ões) prevista(s):	**Fogão de aquecimento residencial, alimentado por combustíveis sólidos.**
	Verwendungszweck(e):	**Häusliche Raumheizer für feste Brennstoffe.**
3	**Fabricante:** Fabricant: *Manufacturer:* **Fabbricante:** Fabricant: *Hersteller:*	LACUNZA KALOR GROUP S.A.L. Pol. Ind. Ibarrea 5A 31800 Alsasua (Navarra) (Spain) T. (0034) 948563511 comercial@lacunza.net www.lacunza.net
5	**Sistemas de evaluación y verificación de la constancia de las prestaciones (EVCP):** Système(s) d'évaluation et de vérification de la constance des performances: *System/s of AVCP:* **Sistemi di VVCP:** Sistema(s) de avaliação e verificação da regularidade do desempenho (AVCP): *System zur Bewertung und Überprüfung der Leistungsbeständigkeit:*	3
6a	**Norma armonizada:** Norme harmonisée: *Harmonised standard:* **Norma armonizzata:** Norma harmonizada: *Harmonisierte Norm:*	EN-16510-2-1 (2022)
6a	**Organismos notificados:** Organisme(s) notifié(s): *Notified body/ies:* **Organismi notificati:** Organismo(s) notificado(s): *Notifizierte Stelle(n):*	CEIS Nº 1722 Centro de ensayos, innovación y servicios Cr. Villaviciosa de Odón a Mostoles (M-856) Km 1.5 Móstoles 28935

7	**Características esenciales** Caractéristiques essentielles *Essential features*	**Caratteristiche essenziali** Características essenciais *Unerlässliche Eigenschaften*	**Prestaciones declaradas:** Performance(s) déclarée(s): *Declared performance/s:*	**Prestazioni dichiarate:** Desempenho(s) declarado(s): *Erklärte Leistung(en):*
	Capacidad para soportar carga Capacité de chargement *Load bearing capacity*	**Capacità di carico** Capacidade de carga *Tragfähigkeit*	**NPD**	
	Protección de materiales combustibles Protection des matériaux combustibles *Protection of combustible materials*	**Protezione dei materiali combustibili** Proteção de materiais combustíveis *Schutz brennbarer Materialien*		

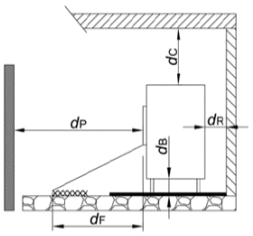

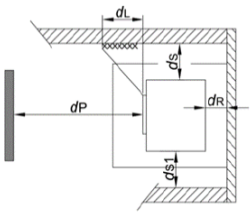

dS =	200 mm	dL =	0 mm
dS1 =	200 mm	dC =	800 mm
dR =	100 mm	dF =	0 mm
dP =	1300 mm	dB =	200 mm

	A	B
Prestación Declarada a Potencia Calorífica: Performance déclarée à la puissance thermique: *Declared Performance at Heating Power:* **Prestazioni dichiarate alla potenza termica:** Desempenho declarado na potência de aquecimento: *Angegebene Leistung bei:*	**Nominal** Nominale *Nominal* **Nominale** Nominal *Nennheizleistung*	**A carga parcial** Á charge partielle *At partial load* **A carico parziale** Com carga parcial *Teillast-Heizleistung*
Emisión. Émission. *Emission.* **Emissione**. Emissão. *Emission* **CO_{nom}** (13%O_2) / **CO_{part}** (13%O_2)	A 715 mg/m³	B 5157 mg/m³
Emisión. Émission. *Emission.* **Emissione**. Emissão. *Emission* **NOx_{nom}** (13%O_2) / **NOx_{part}** (13%O_2)	A 120 mg/m³	B 161 mg/m³
Emisión. Émission. *Emission.* **Emissione**. Emissão. *Emission* **OGC_{nom}** (13%O_2) / **OGC_{part}** (13%O_2)	A 33 mg/m³	B 620 mg/m³
Emisión. Émission. *Emission.* **Emissione**. Emissão. *Emission* **PM_{nom}** (13%O_2) / **PM_{part}** (13%O_2)	A 18 mg/m³	B 37 mg/m³
Temperatura de salida de gases de combustión (TSnom/TSpart) Température de sortie des gaz de combustión (TSnom/TSpart) *Combustion gas outlet temperature* (TSnom/TSpart) **Temperatura uscita gas di combustione (TSnom/TSpart)** Temperatura de saída do gás de combustão (TSnom/TSpart) *Verbrennungsgasaustrittstemperatur* (TSnom/TSpart)	A 245 °C	B 145 mg/m³
Tiro mínimo (Pnom/Ppart) Tirage minimum (Pnom/Ppart) *Minimum depression* (Pnom/Ppart) **Depressione minima (Pnom/Ppart)** Depressão mínima (Pnom/Ppart) *Minimale depression* (Pnom/Ppart)	A 12 Pa	B 6 Pa
Caudal másico de los gases de combustión (**Øf,g_{nom}/Øf,g_{part}**) Débit massique des gaz de combustion (**Øf,g_{nom}/Øf,g_{part}**) *Mass flow rate of combustion gases* (**Øf,g_{nom}/Øf,g_{part}**) **Portata massica dei gas di combustione** (**Øf,g_{nom}/Øf,g_{part}**) Taxa de fluxo de massa de gases de combustão (**Øf,g_{nom}/Øf,g_{part}**) *Massenstrom der Verbrennungsgase* (**Øf,g_{nom}/Øf,g_{part}**)	A 7 g/s	B 5 g/s
Seguridad contra incendios de instalaciones en una chimenea (**T_{class}**) Sécurité incendie des installations dans une cheminée (**T_{class}**) *Fire safety of installations in a chimney* (**T_{class}**) **Sicurezza antincendio delle installazioni** (**T_{class}**) Segurança contra incêndio de instalações em chaminé (**T_{class}**) *Brandschutz von Anlagen in einem Schornstein* (**T_{class}**)	T400	

Potencia de calefacción (Pnom/Ppart) Puissance de chauffe (Pnom/Ppart) *Heating power* (Pnom/Ppart)	**Potenza di riscaldamento (Pnom/Ppart)** Potência de aquecimento (Pnom/Ppart) *Heizleistung* (Pnom/Ppart)	A 7,2 kW	B 2,8 kW
Potencia de calentamiento de agua (PWnom/PWpart) Puissance de chauffage de l'eau (PWnom/PWpart) *Water heating power* (PWnom/PWpart) **Potenza di riscaldamento del l'acqua (PWnom/PWpart)** Potência de aquecimento (PWnom/PWpart) *Wasserheizleistung* (PWnom/PWpart)		A NPD	B NPD
Eficiencia (ηnom/ηpart) Efficacité (ηnom/ηpart) *Efficiency* (ηnom/ηpart)	**Efficienza** (ηnom/ηpart) Eficiência (ηnom/ηpart) *Effizienz* (ηnom/ηpart)	A 81 %	B 78 %
Eficiencia de calefacción estacional (ηs) Efficacité du chauffage saisonnier (ηs) *Seasonal heating efficiency* (ηs)	**Efficienza térmica stagionale** (ηs) Eficiência de aquecimento sazonal (ηs) *Saisonale Heizeffizienz* (ηs)	71	
Índice eficiencia energética (EEI) Indice d'efficacité énergétique (EEI) *Energy efficiency index* (EEI)	**Indice di efficienza energetica (EEI)** Índice de eficiência energética (EEI) *Energieeffizienzindex* (EEI)	107	
Clase Classe *Class*	**Classe** Classe *Klasse*	A+	
Consumo de energía eléctrica *(elmáx / elmín)* Consommation d'énergie électrique *(elmáx / elmín)* *Electrical energy consumption (elmáx / elmín)* **Consumo di energia elettrica** *(elmáx / elmín)* Consumo de energia elétrica *(elmáx / elmín)* *Elektrischer Energieverbrauch (elmáx / elmín)*		A NPD	B NPD
Consumo de energía modo espera (elsb) Consommation d'énergie en veille (elsb) *Standby power consumption* (elsb)	**Consumo energético in standby (elsb)** Consumo de energia em espera (elsb) *Standby-Stromverbrauch* (elsb)	NPD	
Sostenibilidad medioambiental La durabilité environnementale *Environmental sustainability*	**Sostenibilità ambientale** Sustentabililidade ambiental *Umweltverträglichkeit*		

Las prestaciones del producto identificado anteriormente son conformes con el conjunto de las prestaciones declaradas.
Les performances du produit identifié ci-dessus sont conformes à toutes les performances déclarées.
The performances of the product identified above are in accordance with all the declared performances.

Le prestazioni del prodotto sopra identificato sono conformi a tutte le prestazioni dichiarate.
Os desempenhos do produto acima identificados estão de acordo com todos os desempenhos declarados.
Die oben genannten Leistungen des Produkts entsprechen allen erklärten Leistungen.

La presente declaración de prestaciones se emite, de conformidad con el Reglamento (UE) nº 305/2011, bajo la sola responsabilidad del fabricante arriba identificado.
Cette déclaration des performances est établie, conformément au Règlement (UE) n° 305/2011, sous la seule responsabilité du fabricant identifié ci-dessus.
This declaration of performance is issued, in accordance with Regulation (EU) No. 305/2011, under the sole responsibility of the manufacturer identified above.

La presente dichiarazione di prestazione viene rilasciata, in conformità al Regolamento (UE) n. 305/2011, sotto la responsabilità esclusiva del produttore sopra identificato.
Esta declaração de desempenho é emitida, de acordo com o Regulamento (UE) n.º 305/2011, sob a exclusiva responsabilidade do fabricante acima identificado.
Die Erstellung dieser Leistungserklärung erfolgt gemäß Verordnung (EU) Nr. 305/2011 in alleiniger Verantwortung des oben genannten Herstellers.

LACUNZA
Natural comfort
LACUNZA KALOR GROUP S.A.L.
Pol. Ind. Ibarrea 5A 31800
Alsasua (Navarra) (Spain)
T. (0034) 948563511
comercial@lacunza.net
www. lacunza.net

Firmado por y en nombre del fabricante por:
Signé pour le fabricant et en son nom par:
Signed for and on behalf of the manufacturer by:
Firmato a nome e per conto del fabbricante da:
Assinado por e em nome do fabricante por:
Unterzeichnet für den Hersteller und im Namen des Herstellers von :

ALSASUA (Navarra, Spain) a 5/2/2025

José Julián Garciandía
Director Gerente

9. CE MARK

CE 25	LACUNZA KALOR GROUP S.A.L. Pol. Ind. Ibarrea 5A 31800 Alsasua (Navarra) (Spain) www.lacunza.net	
	DoP: **ES-S-057E**	**EN 16510-2-1 (2022)**

Marca, Marque, Mark, Marca, Marca, Markierung: **LACUNZA**
Tipo, Type, Type, Tipo, Tipo, Nett: **Estufa, Poêle, Stufa, Stove, Aquecedor, Holzofen**
Modelo, Modèle, Model, Modello, Modelo, Modell: **MAULE**

Organismo notificado: Organisme notifié: Notified body: Organismi notificati: Organismo notificado: Notifizierte Stelle: **CEIS N° 1722**

Aparato Tipo, Type d'appareil, Apparatus Type, Tipo di apparecchio, Tipo de aparelho, Gerätetyp: **BE**

Estufa de calefacción residencial, alimentada con combustibles sólidos. Poêles de chauffage domestiques à combustible solid. Residential solid fuel burning Roomheaters. Stufa di riscaldamento domestici a combustibile solido. Fogão de aquecimento residencial, alimentado por combustíveis sólidos. Häusliche Raumheizer für feste Brennstoffe.

Características esenciales, Caractéristiques essentielles, Essential features, Caratteristiche essenziali, , Características essenciais, Unerlässliche Eigenschaften	**Prestaciones, Performance, Prestazione, Services, Desempenho, Leistungen**
Capacidad para soportar carga, Capacité de chargement, Load bearing capacity, Capacità di carico, Capacidade de carga, Tragfähigkeit	**NPD**
Protección de materiales combustibles. Protection des matériaux combustibles. Protection of combustible materials. Protezione dei materiali combustibili. Proteção de materiais combustíveis. Schutz brennbarer Materialien 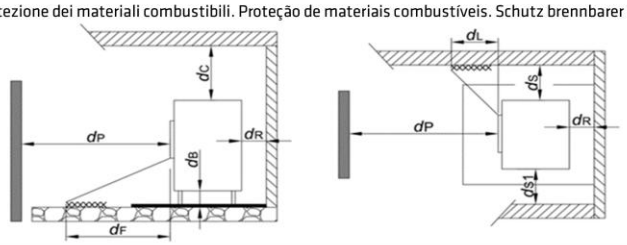	**dS = 200mm** **dS1 = 200mm** **dR = 100mm** **dP = 1300mm** **dL = 0mm** **dC = 700mm** **dF = 0mm** **dB = 200mm**

Prestación Declarada a Potencia Calorífica: Performance déclarée à la puissance thermique: Declared Performance at Heating Power: Prestazioni dichiarate alla potenza termica: Desempenho declarado na potência de aquecimento: Angegebene Leistung bei:	**Nominal** Nominale *Nominal* **Nominale** Nominal *Nennheizleistung*	**A carga parcial** Á charge partielle *At partial load* **A carico parziale** Com carga parcial *Teillast-Heizleistung*
Emisión. Émission. Emission. Emissione. Emissão. Emission **COnom (13%O2) / COpart (13%O2)**	**715 mg/m³**	**5157 mg/m³**
Emisión. Émission. Emission. Emissione. Emissão. Emission **NOxnom (13%O2)/NOxpart (13%O2)**	**120 mg/m³**	**161 mg/m³**
Emisión. Émission. Emission. Emissione. Emissão. Emission **OGCnom (13%O2)/OGCpart (13%O2)**	**33 mg/m³**	**620 mg/m³**
Emisión. Émission. Emission. Emissione. Emissão. Emission **PMnom (13%O2) / PMpart (13%O2)**	**18 mg/m³**	**37 mg/m³**
Temperatura de salida de gases de combustión. Température de sortie des gaz de combustión. Combustion gas outlet temperature. Temperatura uscita gas di combustione. Temperatura de saída do gás de combustão. Verbrennungsgasaustrittstemperatur. **(TSnom/TSpart)**	**245 °C**	**145 °C**
Tiro mínimo. Tirage minimum. Minimum depression. Depressione mínima. Depressão mínima. Minimale depression **(Pnom/Ppart)**	**12 Pa**	**6 Pa**
Caudal másico de los gases de combustión. Débit massique des gaz de combustion. Mass flow rate of combustion gases. Portata massica dei gas di combustion. Taxa de fluxo de massa de gases de combustão. Massenstrom der Verbrennungsgase **(Øf,gnom/Øf,gpart)**	**7 g/s**	**5 g/s**
Seguridad contra incendios de instalaciones en una chimenea. Sécurité incendie des installations dans une cheminée. Fire safety of installations in a chimney. Sicurezza antincendio delle installazioni. Segurança contra incêndio de instalações em chaminé.Brandschutz von Anlagen in einem Schornstein **(Tclass)**	**T400**	
Potencia de calefacción. Puissance de chauffe. Heating power. Potenza di riscaldamento. Potência de aquecimento. Heizleistung **(Pnom/Ppart)**	**7,2 kW**	**2,8 kW**
Potencia de calentamiento de agua. Pussance de chauffage de l'eau. Water heating power.Potenza di riscaldamento del l'acqua. Potência de aquecimento. Wasserheizleistung **(PWnom/PWpart)**		
Eficiencia. Efficacité. Efficiency. Efficienza. Eficiência. Effizienz **(ηnom/ηpart)**	**81 %**	**78 %**
Eficiencia de calefacción estacional. Efficacité du chauffage saisonnier. Seasonal heating efficiency. Efficienza térmica stagionale. Eficiência de aquecimento sazonal. Saisonale Heizeffizienz **(ηs)**	**71%**	
Índice eficiencia energética. Indice d'efficacité énergétique. Energy efficiency index. Indice di efficienza energética. Índice de eficiência energética. Energieeffizienzindex **(EEI)**	**107**	
Clase. Classe. Class. Classe. Classe.Klasse	**A+**	
Consumo de energía eléctrica. Consommation d'énergie électrique. Electrical energy consumption. Consumo di energia elettrica. Consumo de energia elétrica. Elektrischer Energieverbrauch **(elmáx / elmín)**		
Consumo de energía modo espera. Consommation d'énergie en veille. Standby power consumption. Consumo energético in standby. Consumo de energia em espera. Standby-Stromverbrauch **(elsb)**		

LACUNZA KALOR GROUP S.A.L
Pol. Ind. Ibarrea 5A
31800 Alsasua (Navarra) Spain
Tel.: (00 34) 948 56 35 11
Fax.: (00 34) 948 56 35 05
e-mail: comercial@lacunza.net
Website: www.lacunza.net
EDITION: 01